Polo Estate 1998 ➤

4-Cyl. injection engine, Mechanics (1.4 and 1.6 l engine)									
Engine ID	AEE	AEX	AKV	APQ	ANX	ALM			

Edition 08.1997

Protected by copyright. Copying for private or commercial purposes, in part or in whole, is not permitted unless authorised by Volkswagen AG. Volkswagen does not guarantee or accept any liability with respect to the correctness of information in this document. Copyright by Volkswagen AG.

satelettronica

List of Workshop Manual Repair GroupsList of Workshop Manual Repair GroupsList of Workshop Manual Repair Groups

Polo Estate 1998 ➤

4-Cyl. injection engine, Mechanics (1.4 and 1.6 l engine)

Repair Group

00 - Technical data
10 - Removing and installing engine
13 - Crankshaft group
15 - Cylinder head, Valve gear
17 - Lubrication
19 - Cooling system
20 - Fuel supply system
26 - Exhaust system

Protected by copyright. Copying for private or commercial purposes, in part or in whole, is not permitted unless authorised by Volkswagen AG. Volkswagen AG does not guarantee or accept any liability with respect to the correctness of information in this document. Copyright by Volkswagen AG.

satelettronica

Technical information should always be available to the foremen and mechanics, because their careful and constant adherence to the instructions is essential to ensure vehicle road-worthiness and safety. In addition, the normal basic safety precautions for working on motor vehicles must, as a matter of course, be observed.

All rights reserved.
No reproduction without prior agreement from publisher.

Copyright © 2011 Volkswagen AG, Wolfsburg

00056405120

Protected by copyright. Copying for private or commercial purposes, in part or in whole, is not permitted unless authorised by Volkswagen AG. Volkswagen AG does not guarantee or accept any liability with respect to the correctness of information in this document. Copyright by Volkswagen AG.

Contents

00 - Technical data 1

1 Technical data 1
1.1 Technical data 1
1.2 Engine number 1
1.3 Engine data 1

10 - Removing and installing engine 3

1 Removing and installing engine 3
1.1 Removing and installing engine 3
1.2 Notes on removing 3
1.3 Notes on installing 4
1.4 Tightening torques 5
1.5 Assembly mountings 6
1.6 Renewing engine carrier rubber mounting 7
1.7 Additional information and removal instructions for vehicles with air conditioner 8

13 - Crankshaft group 9

1 Dismantling and assembling engine 9
1.1 Dismantling and assembling engine 9
1.2 Removing and installing ribbed belt 17
1.3 Removing and installing toothed belt 18
1.4 Checking semi-automatic toothed belt tensioning roller 20

2 Dismantling and assembling cylinder block, crankshaft and flywheel 21
2.1 Dismantling and assembling cylinder block, crankshaft and flywheel 21
2.2 Renewing crankshaft oil seal - pulley end - 24
2.3 Crankshaft dimensions 27

3 Dismantling and assembling pistons and conrods 28
3.1 Dismantling and assembling pistons and conrods 28
3.2 Piston and cylinder dimensions 33

15 - Cylinder head, Valve gear 34

1 Removing and installing cylinder head 34
1.1 Removing and installing cylinder head 34
1.2 Removing and installing cylinder head 38
1.3 Checking compressions 40

2 Servicing valve gear 42
2.1 Servicing valve gear 42
2.2 Reworking valve seats 47
2.3 Removing and installing camshaft oil seal 49
2.4 Checking hydraulic bucket tappets 50
2.5 Removing and installing camshaft 51
2.6 Checking valve guides 52
2.7 Renewing valve guides 53
2.8 Renewing valve stem seals 53

17 - Lubrication 55

1 Removing and installing parts of the lubrication system 55
1.1 Removing and installing parts of the lubrication system 55
1.2 Removing and installing oil sump 66
1.3 Removing and installing Duo-centric oil pump 67
1.4 Checking oil pressure and oil pressure switch 70

19 - Cooling system 72

satelettronica

1 Removing and installing parts of cooling system 72
1.1 Removing and installing parts of cooling system 72
1.2 Parts of cooling system body side 73
1.3 Parts of cooling system - engine side 76
1.4 Draining and filling cooling system 80
1.5 Removing and installing radiator 82

20 - Fuel supply system 83
1 Removing and installing parts of fuel supply system 83
1.1 Removing and installing parts of fuel supply system 83
1.2 Removing and installing fuel tank with its attachments 84
1.3 Safety precautions when working on the fuel supply system 94
1.4 Rules for cleanliness 95
1.5 Adjusting throttle cable 95
1.6 Removing and installing fuel delivery unit 95
1.7 Checking fuel pump 96
1.8 Removing and installing fuel tank 101
1.9 Removing and installing parts of the activated charcoal filter system 103
1.10 Checking fuel tank breather 104

26 - Exhaust system 107
1 Removing and installing parts of exhaust system 107
1.1 Removing and installing parts of exhaust system 107

Protected by copyright. Copyright by Volkswagen AG. Volkswagen AG does not guarantee or accept any liability with respect to the correctness of information in this document. Copyright by Volkswagen AG. Reproduction, in whole or in part or in any form or medium without express written authorization is not permitted. Protected by copyright. Copyright by Volkswagen AG.

satelettronica

00 - Technical data

1 - Technical data

1.1 - Technical data

1.2 - Engine number

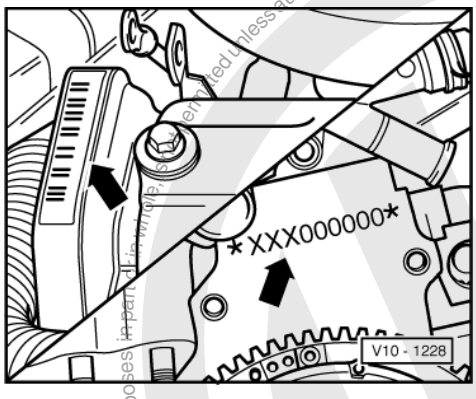

-> The engine number ("Code letters" and "Serial number") can be found on the front of the cylinder block at the gearbox end below the thermostat housing.

Additionally there is a sticker on the toothed belt guard with "Engine code" and "Serial number".

The engine code is also included on the vehicle data plate.

1.3 - Engine data

Engine code		AEE	AEX, APQ	AKV
Manufactured		08.97 ▸	11.95 ▸	08.97 ▸
Displacement	cm3	1598	1390	1390
Output	kW at rpm	55/4600	44/4700	44/4700
Torque	Nm at rpm	135/3200	116/2800...3200	116/2800...3200
Bore	ø mm	76.5	76.5	76.5
Stroke	mm	86.9	75.6	75.6
Compression ratio		9.8:1	10.2:1	10.2:1
RON	min.	95 unleaded1)	95 unleaded1)	95 unleaded1)
Injection, ignition		1AV	Motronic MP 9.0	Motronic MP 9.0
Knock control		x	x	x
Self-diagnosis		x	x	x
Lambda control		x	x	x
Catalyst		x	x	x
Charged		-	-	-

Protected by copyright. Copying for private or commercial purposes, in part or in whole, is not permitted unless authorised by Volkswagen AG. Volkswagen AG does not guarantee or accept any liability with respect to the correctness of information in this document. Copyright by Volkswagen AG.
satelettronica

Engine code	AEE	AEX, APQ	AKV
Exhaust emissions fulfil	MVEG II standard	MVEG II standard	3D standard

1) In exceptional circumstances min. 91 RON, however with reduced performance

Engine code		ANX	ALM
Manufactured		01.98 ▸	07.98 ▸
Displacement	cm3	1390	1598
Output	kW at rpm	402)/4700	55/4600
Torque	Nm at rpm	116/3000	135/3200
Bore	ø mm	76.5	76.5
Stroke	mm	75.6	86.9
Compression ratio		10.2	9.8
RON	min.	95 unleaded1)	95 unleaded1)
Injection, ignition		Motronic 9.0	1AV
Knock control		x	x
Self-diagnosis		x	x
Lambda control		x	x
Catalyst		x	x
Charged		-	-
Exhaust emissions fulfil		MVEG II standard	D3 standard

1) In exceptional circumstances min. 91 RON, however with reduced performance

2) Austria: Reduction in output due to plate in catalyst.

Protected by copyright. Copying for private or commercial purposes, in any form or medium is not permitted unless authorised by Volkswagen AG. Volkswagen AG does not guarantee or accept any liability with respect to the correctness of information in this document. Copyright by Volkswagen AG.

satelettronica

10 - Removing and installing engine

1 - Removing and installing engine

1.1 - Removing and installing engine

Special tools, testers, measuring instruments and auxiliary items required

- Drip tray V.A.G 1306
- Pliers V.A.G 1921 for spring type clips
- Lifting tackle 2024 A
- Grease G 000 100
- V.A.G 1331 Torque wrench (5...50 Nm)
- V.A.G 1332 Torque wrench (40...200 Nm)
- Cable tie

If the engine is to be dismantled:

- Engine bracket VW 540

1.2 - Notes on removing

- First check whether a coded radio is fitted. If this is the case obtain the anti-theft coding.
- The engine is removed upwards together with the gearbox.
- With the ignition switched off disconnect the battery earth strap.
- All cable ties which are opened or cut open when removing engine, must be replaced in the same position when installing engine.
- Remove right-hand drive shaft and unbolt left-hand drive shaft and tie up.
- Drain coolant => Page 80 .
- Remove radiator fan with air guide
  => Page 82 , removing and installing radiator.

Vehicles with power assisted steering:

- Tie-up power steering reservoir and unbolt bracket from body if necessary.
- Remove power assisted steering vane pump and secure to engine carrier with wire; hoses remain connected:

=> Running gear; Repair group 48; Assembly overview: vane pump, reservoir, hydraulic lines; Removing and installing power steering vane pump. Assembly overview: vane pump, reservoir, hydraulic lines Removing and installing power steering vane pump.

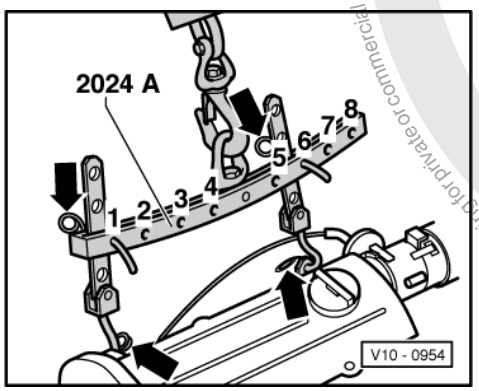

satelettronica
Protected by copyright. Copying for private or commercial purposes, in part or in whole, is not permitted unless authorised by Volkswagen AG. Volkswagen AG does not guarantee or accept any liability with respect to the correctness of information in this document. Copyright by Volkswagen AG.

Vehicles with air conditioner:

- Observe additional information and removal instructions => Page 8 .

- -> Attach lifting tackle 2024 A as follows and lift slightly with workshop crane:

  Pulley end:
  2nd hole in hook at position 1

  Flywheel end:
  2nd hole in hook at position 6

Warning! The hooks and locating pins must be secured with locking pins.

Notes:

- The positions marked 1...4 on the bar must be towards the pulley end.
- The holes in the hook rails are counted up from the hook.

- Remove front console and lift assembly out upwards.

Note:

When the assembly is lifted off, it must be carefully guided to prevent damage to the bodywork.

When working on the engine, it should be secured to the engine stand using the engine bracket VW 540.

1.3 - Notes on installing

Installation is carried out in the reverse sequence, when doing this note the following:

- Check clutch release bearing for wear, renew if necessary.
- Lightly grease clutch release bearing, release bearing guide sleeve and splines on input shaft with G 000 100.
- Check whether the dowel sleeves for centralising engine/gearbox are in the cylinder block, install if necessary.
- When lowering the assembly, ensure that clearance exists to drive shaft.

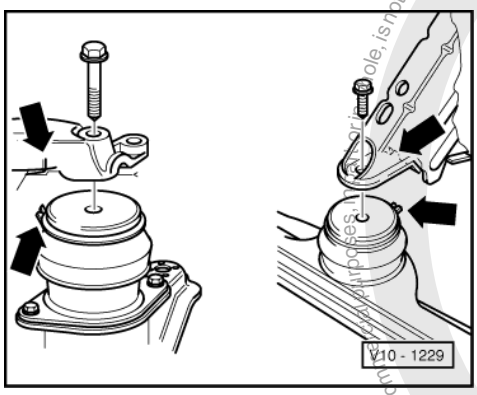

- -> When installing the engine mounting ensure that the rib on the rear right console also the recess on the front console locates on the lugs of the bonded rubber mounting -arrows-.
- Align engine mountings stress-free by rocking.
- Renew pointed bolt for securing shift finger (clean threads in shift finger).
- Installing clutch cable:

satelettronica

=> 5-Speed manual gearbox 085; Repair group 30; Servicing clutch mechanism; Removing and installing clutch cable. Servicing clutch mechanism Removing and installing clutch cable.

- Install right-hand drive shaft:

=> Running gear; Repair group 40; Servicing front suspension; Removing and installing wheel bearing, suspension strut and drive shaft Servicing front suspension Removing and installing wheel bearing, suspension strut and drive shaft

Vehicles with power assisted steering:

- Install power assisted steering vane pump:

=> Running gear; Repair group 48; Assembly overview: vane pump, reservoir, hydraulic lines; Removing and installing power steering vane pump. Assembly overview: vane pump, reservoir, hydraulic lines Removing and installing power steering vane pump.

Vehicles with air conditioner:

- Install air conditioner compressor:

=> Heating, air conditioner system; Repair group 87

- Fill with coolant => Page 80
- Adjust throttle cable => Page 95
- Install ribbed V-belt => Page 17 .
- Electrical connections and routing:

=> Current flow diagrams, Electrical fault finding and Fitting locations

- Check and if necessary adjust ignition timing:

=> Repair group 28; Injection and ignition system; Checking and adjusting ignition timing. Injection and ignition system Checking and adjusting ignition timing.

- Perform basic setting:

=> Repair group 24; Injection and ignition system; Performing basic setting Injection and ignition system Performing basic setting

- Match engine electronics control unit to immobilizer:

=> Repair group 24; Injection and ignition system; Matching engine electronics control unit to immobilizer. Injection and ignition system Matching engine electronics control unit to immobilizer.

1.4 - Tightening torques

Bolted connection		Tightening torque
Engine to gearbox	M10	45 Nm
	M12	80 Nm
Starter to gearbox		20 Nm
Flywheel shield plate		10 Nm
Drive shafts to flanged shafts		45 Nm
Exhaust pipe to manifold		40 Nm
Selector finger on selector rod		25 Nm

Protected by copyright. Copyright by Volkswagen AG. Volkswagen AG does not guarantee or accept any liability with respect to the correctness of information in this document. Copyright by Volkswagen AG. Authorised by Volkswagen AG. Volkswagen AG does not guarantee or accept any liability with respect to the correctness of information in this document. Copyright by Volkswagen AG.
satelettronica

1.5 - Assembly mountings

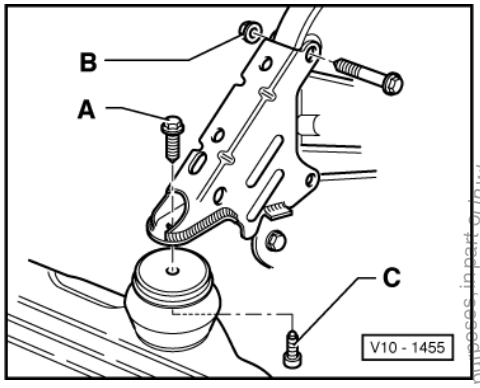

Tightening torques

(Bolts oiled)

-> Front assembly mounting

A = 55 Nm
B = 45 Nm
C = 55 Nm

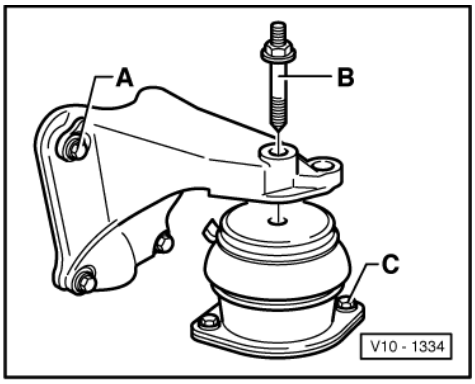

-> Rear right assembly mounting

A = 40 Nm + 1/4turn (90°) further
B = 60 Nm
C = 30 Nm

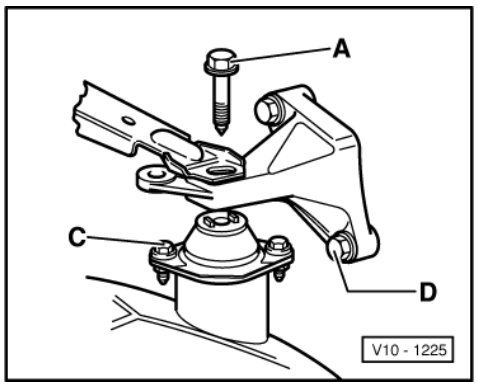

Protected by copyright. Copying for private or commercial purposes, in part or in whole, is not permitted unless authorised by Volkswagen AG. Volkswagen AG does not guarantee or accept any liability with respect to the correctness of information in this document. Copyright by Volkswagen AG.
satelettronica

-> Rear left engine mounting

A = 60 Nm
C = 30 Nm
D = 25 Nm

1.6 - Renewing engine carrier rubber mounting

Special tools, testers, measuring instruments and auxiliary items required

- Engine support bracket 10-222A with legs 10-222A/1
- Peening tool 3302
- Press tool VW 432

Work sequence

- Fit engine support bracket 10-222A with legs 10-222A/1.

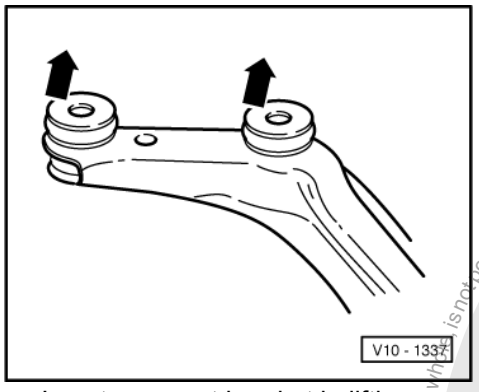

- Locate support bracket in lifting eye on left of cylinder head and take-up weight of engine.
- Remove engine carrier.
- -> Lever off washers from the spacer sleeves with pliers (replace any washers which are damaged e.g. bent washers).
- Pull out spacer sleeves and detach rubber mounting.
- Fit new rubber mounting and insert spacer sleeves as far as possible.

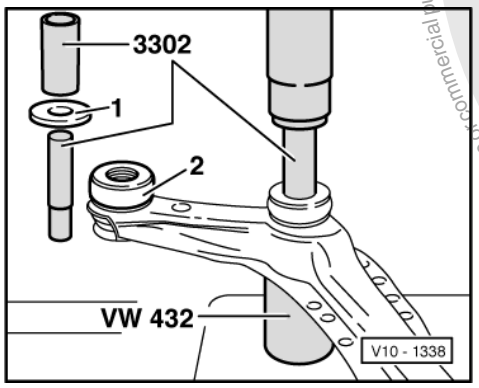

- -> Fit washers -1- over peening tool 3302 onto the rubber mounting -2-.
- Fit press sleeve of peening tool 3302 and using a press, press the washers onto the spacer sleeves and peen. Use VW 432 as packing.
- Remove any resulting protrusion/burr on the peening.

Protected by copyright. Copying for private or commercial purposes, in part or in whole, is not permitted unless authorised by Volkswagen AG. Volkswagen AG does not guarantee or accept any liability with respect to the correctness of information in this document. Copyright by Volkswagen AG.
satelettronica

1.7 - Additional information and removal instructions for vehicles with air conditioner

Warning!
The air conditioning system refrigerant circuit must not be opened.

Note:

The opening of the refrigerant circuit can only be carried out in workshops, which have trained personnel and the necessary range of tools and workshop equipment.

To facilitate removing and installing the engine without opening the refrigerant circuit:

- Unbolt air conditioner compressor and secure it to the body, so that the coolant hoses are not stressed.

Protected by copyright. Copying for private or commercial purposes, in part or in whole, is not permitted unless authorised by Volkswagen AG. Volkswagen AG does not guarantee or accept any liability with respect to the correctness of information in this document. Copyright by Volkswagen AG.

satelettronica

13 - Crankshaft group

1 - Dismantling and assembling engine

1.1 - Dismantling and assembling engine

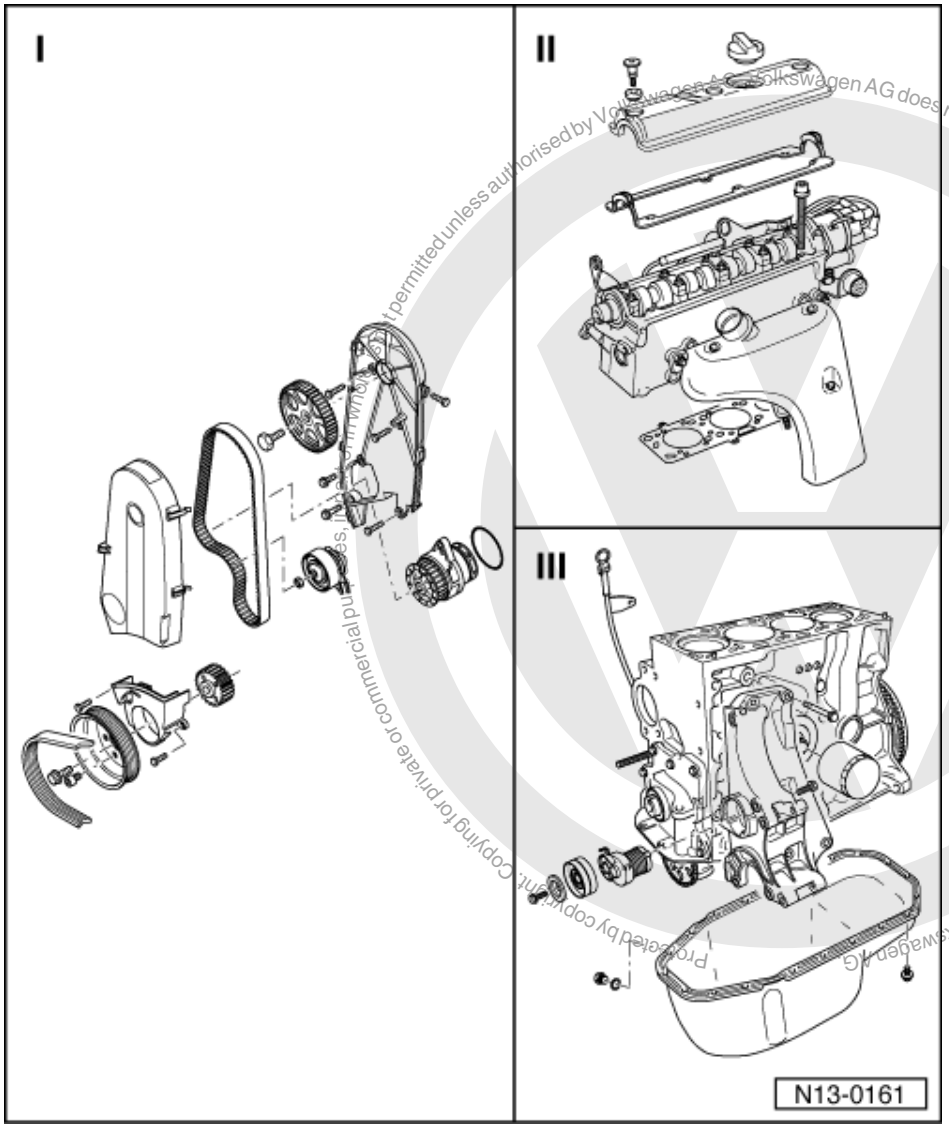

I =>Page 10

II =>Page 13

III =>Page 15

Copyright by Volkswagen AG. Protected by copyright. Copying for private or commercial purposes, in part or in whole, is not permitted unless authorised by Volkswagen AG. Volkswagen AG does not guarantee or accept any liability with respect to the correctness of information in this document.
satelettronica

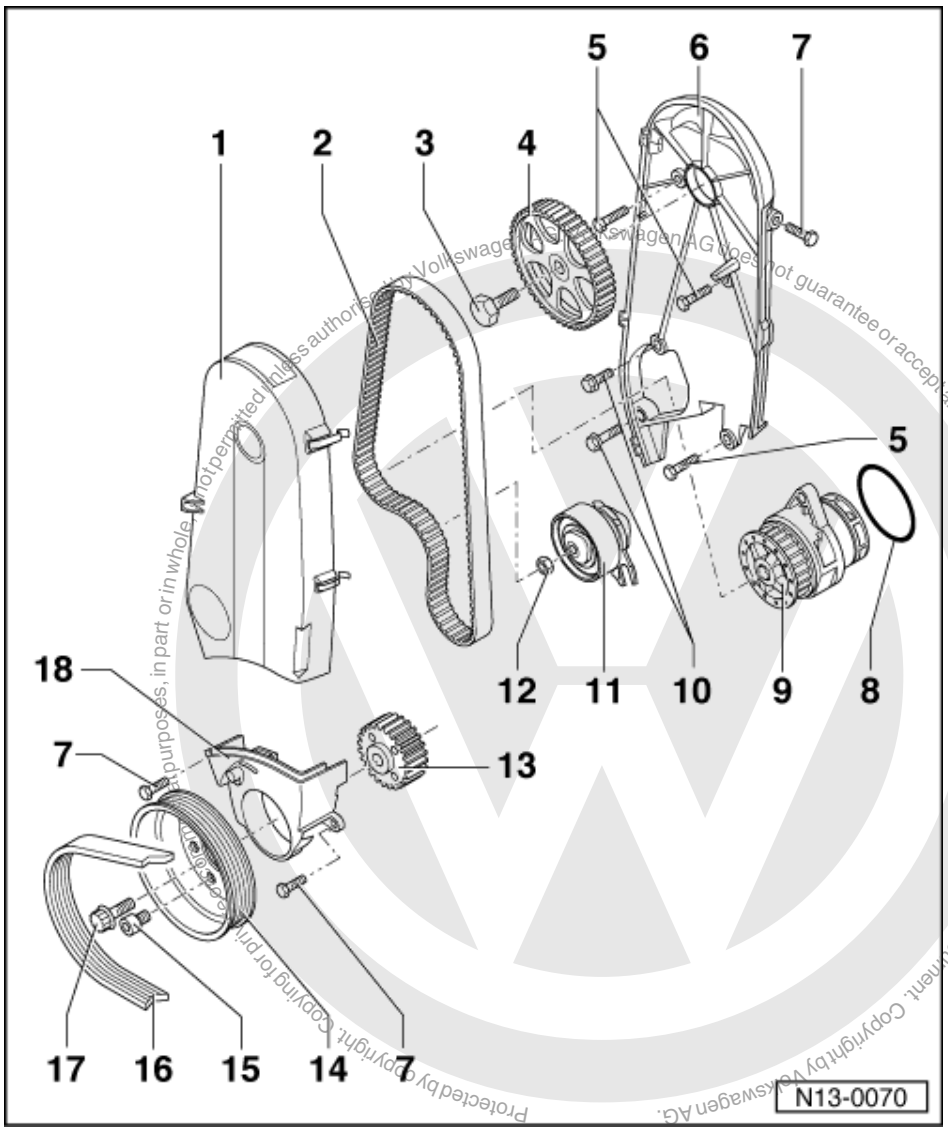

Protected by copyright. Copying for private or commercial purposes, in part or in whole, is not permitted unless authorised by Volkswagen AG. Volkswagen AG does not guarantee or accept any liability with respect to the correctness of information in this document. Copyright by Volkswagen AG.

satelettronica

Part I

1 Toothed belt guard - upper part
2 Toothed belt
- Mark D.O.R. before removing
- Check for wear
- Do not kink
- Removing, installing and tensioning
  => Page 18

3 20 Nm + 1/4 turn (90 °) further
- Renew

4 Camshaft sprocket
- Note position when installing toothed belt
  => Page 18

5 10 Nm
- Install with D6

6 Rear toothed belt guard
7 10 Nm

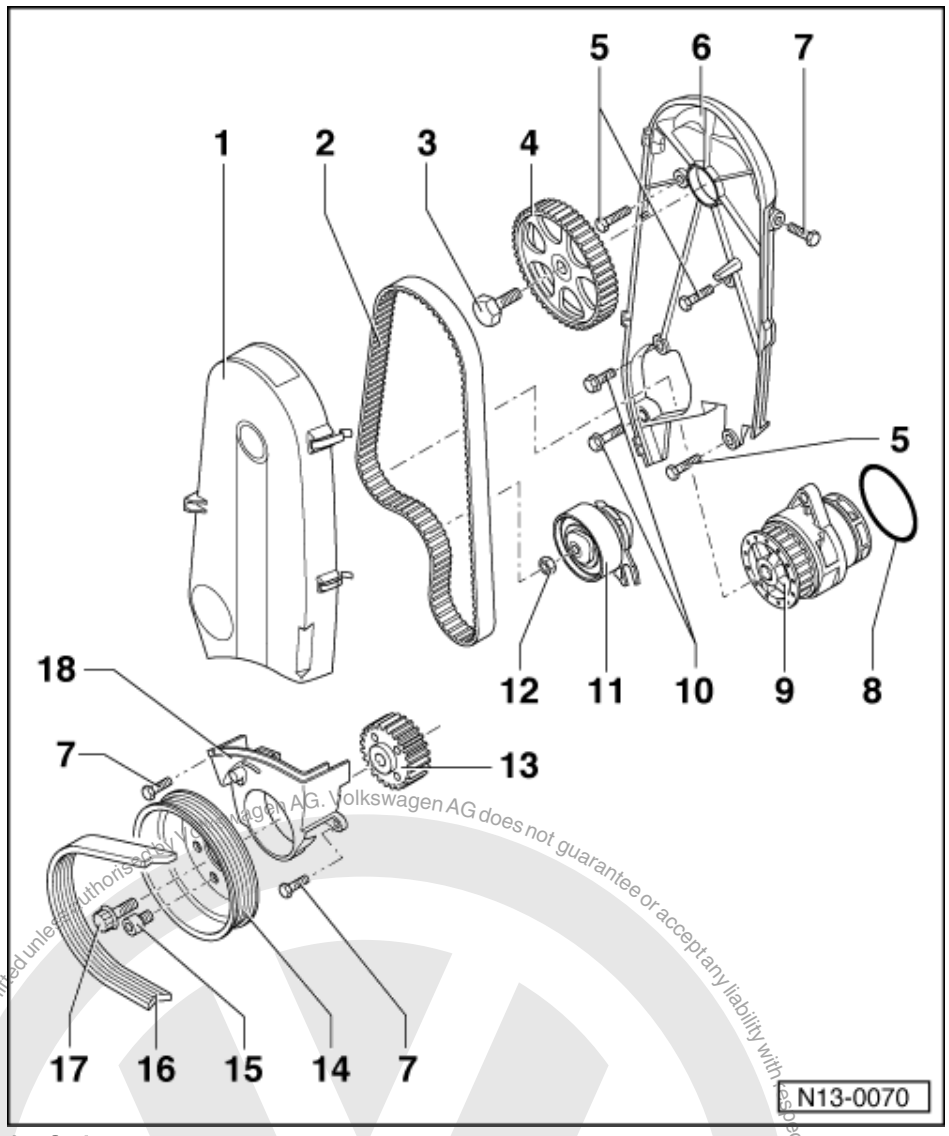

8 O-ring
- Renew

9 Coolant pump

10 20 Nm

11 Tensioner
- Checking => Page 20
- Tensioning toothed belts => Page 18

12 20 Nm

13 Crankshaft toothed belt sprocket
- Note position when installing toothed belt => Page 18

14 Belt pulley
- When installing note fixing arrangement

15 20 Nm

Protected by copyright. Copying for private or commercial purposes, in part or in whole, is not permitted unless authorised by Volkswagen AG. Volkswagen AG does not guarantee or accept any liability with respect to the correctness of information in this document. Copyright by Volkswagen AG.
satelettronica

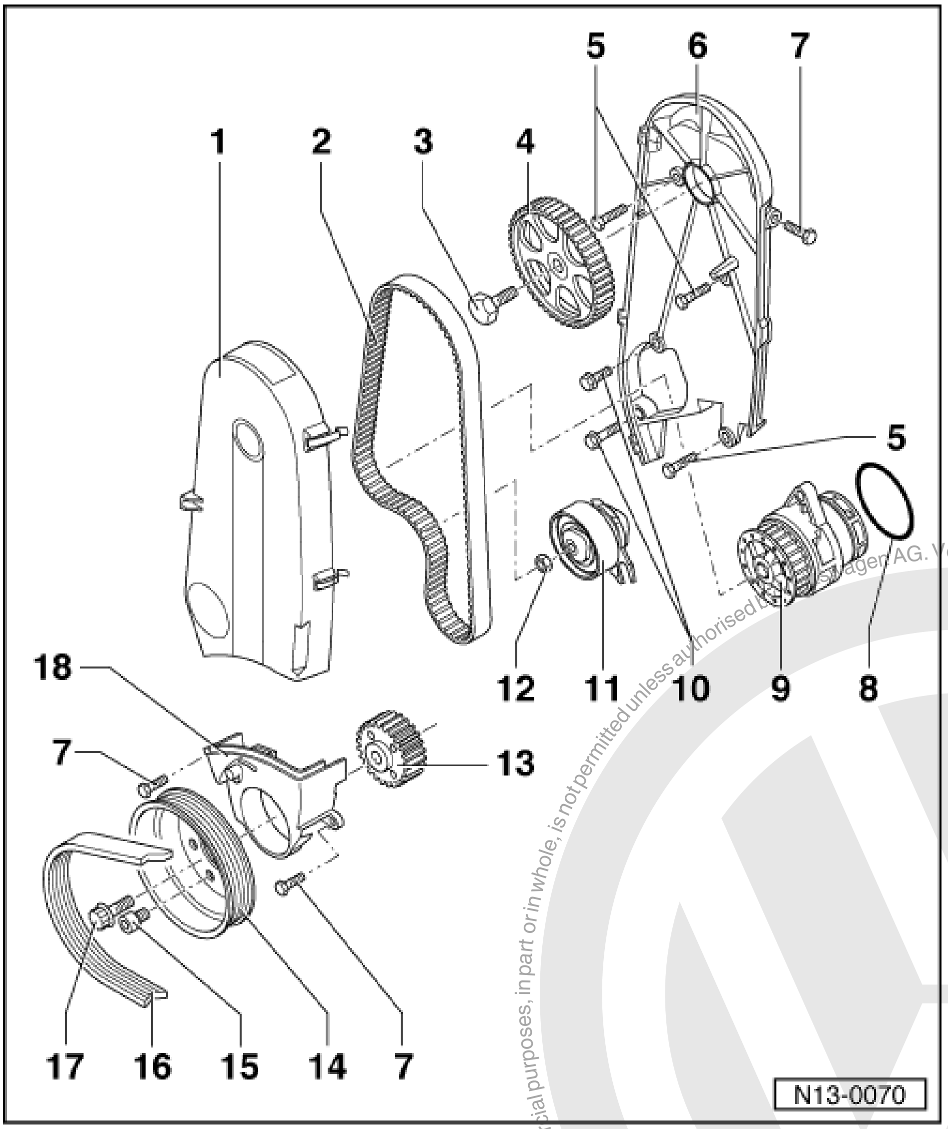

16 Ribbed belt
- Mark direction of rotation before removing
- Removing and installing
  => Page 17

17 Hexagon bolt: 90 Nm + 1/3 turn (120 °) further
Multi-point screw: 90 Nm + 1/4 turn (90 °) further
- Renew
- Oil threads
- The turning further can be done in several stages
- The turning further angle can be checked with a commercial protractor e.g. Hazet 6690

18 Toothed belt guard - lower part

Protected by copyright. Copying for private or commercial purposes, in part or in whole, is not permitted unless authorised by Volkswagen AG. Volkswagen AG does not guarantee or accept any liability with respect to the correctness of information in this document. Copyright by Volkswagen AG.
satelettronica

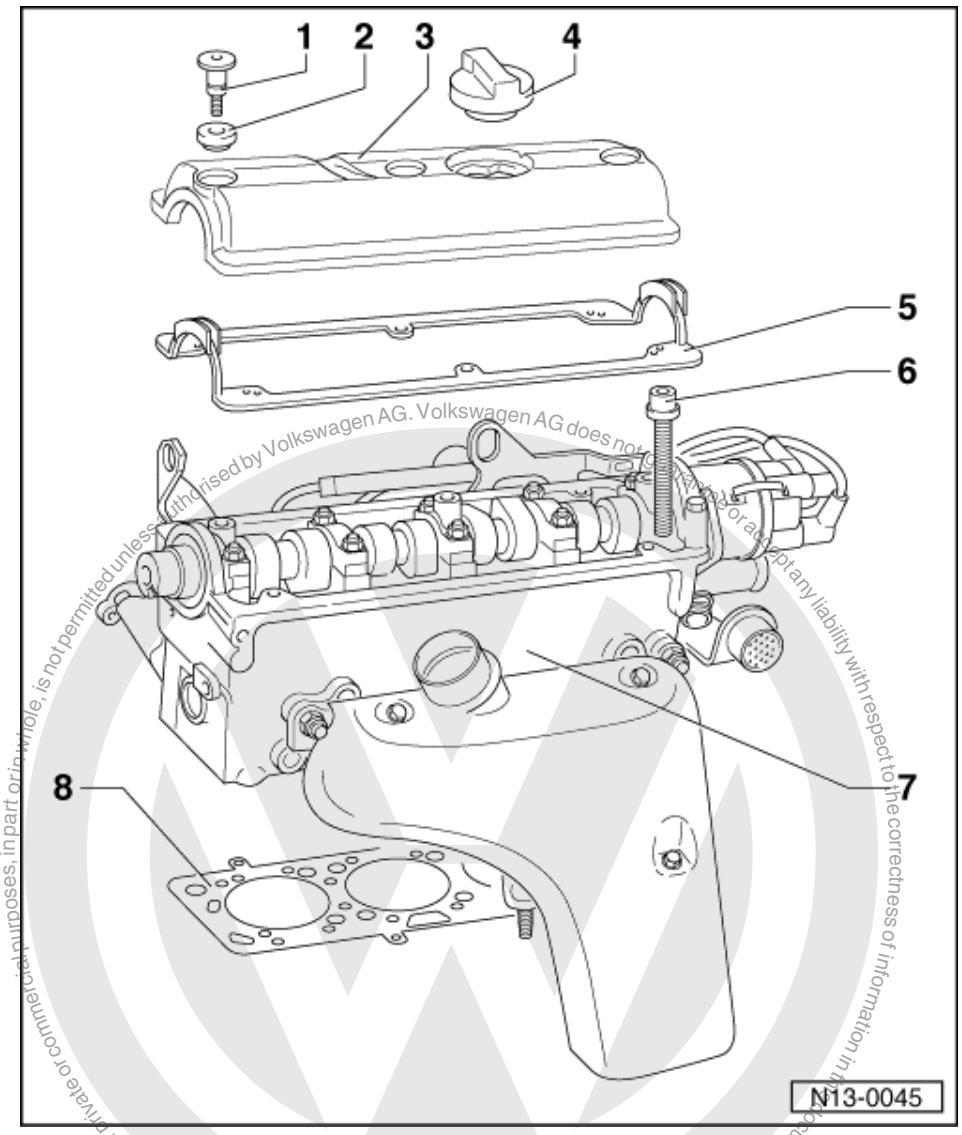

Protected by copyright. Copying for private or commercial purposes, in part or in whole, is not permitted unless authorised by Volkswagen AG. Volkswagen AG does not guarantee or accept any liability with respect to the correctness of information in this document. Copyright by Volkswagen AG.

Part II

1 5 Nm + 1/4 turn (90 °) further
- Renew

2 Sealing washer
- Renew

3 Cylinder head cover

4 Cap
- Renew seal if damaged

5 Cylinder head cover gasket
- Renew if damaged
- Before fitting gasket coat transition between bearing cap/cylinder head with D 454 300 A2

6 Cylinder head bolt
- Renew
- Note installation instructions and sequence when loosening and tightening
  => Page 38

satelettronica

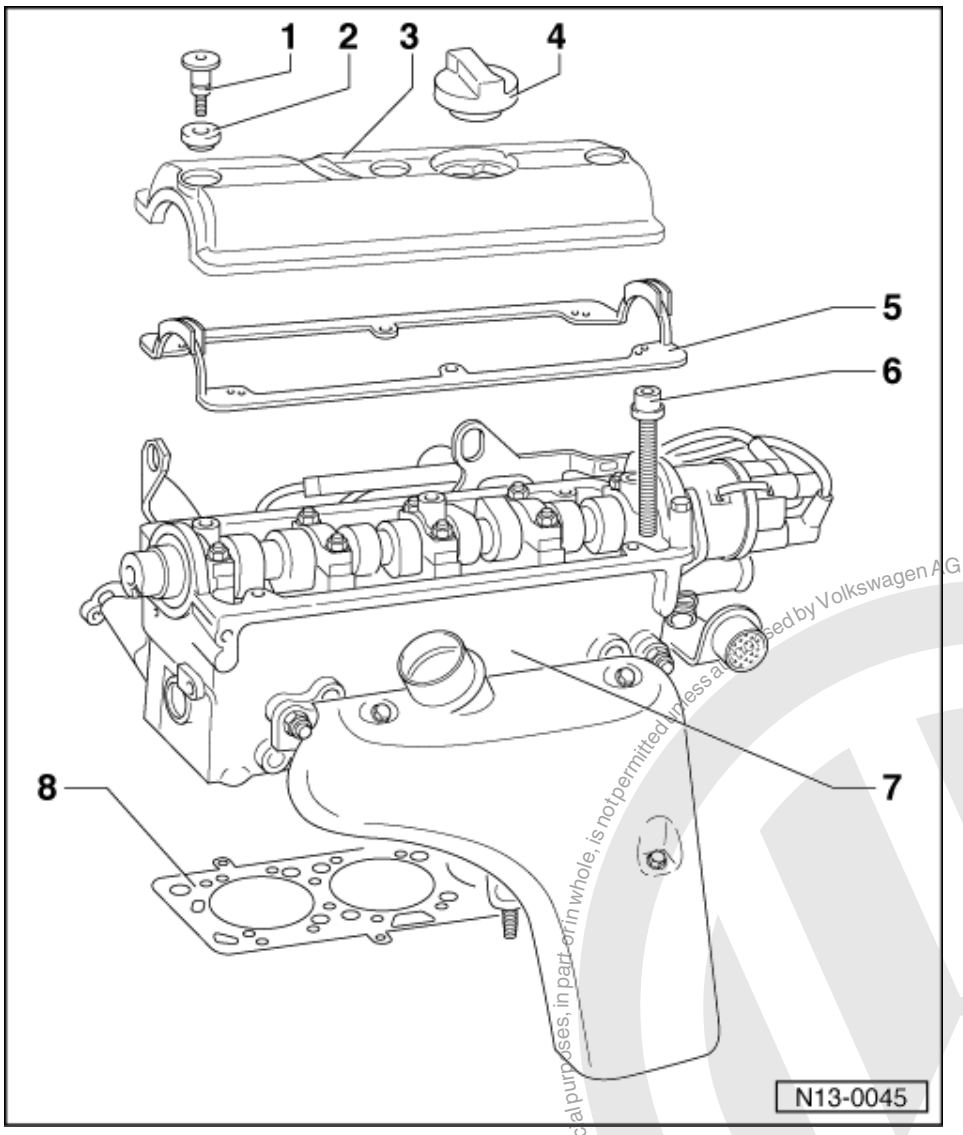

7 Cylinder head
- Removing and installing => Page 38
- If replaced renew the complete coolant

8 Cylinder head gasket
- Renew
- Metal gasket
- If replaced renew the complete coolant

Protected by copyright. Copying for private or commercial purposes, in part or in whole, is not permitted unless authorised by Volkswagen AG. Volkswagen AG does not guarantee or accept any liability with respect to the correctness of information in this document. Copyright by Volkswagen AG.
satelitronica

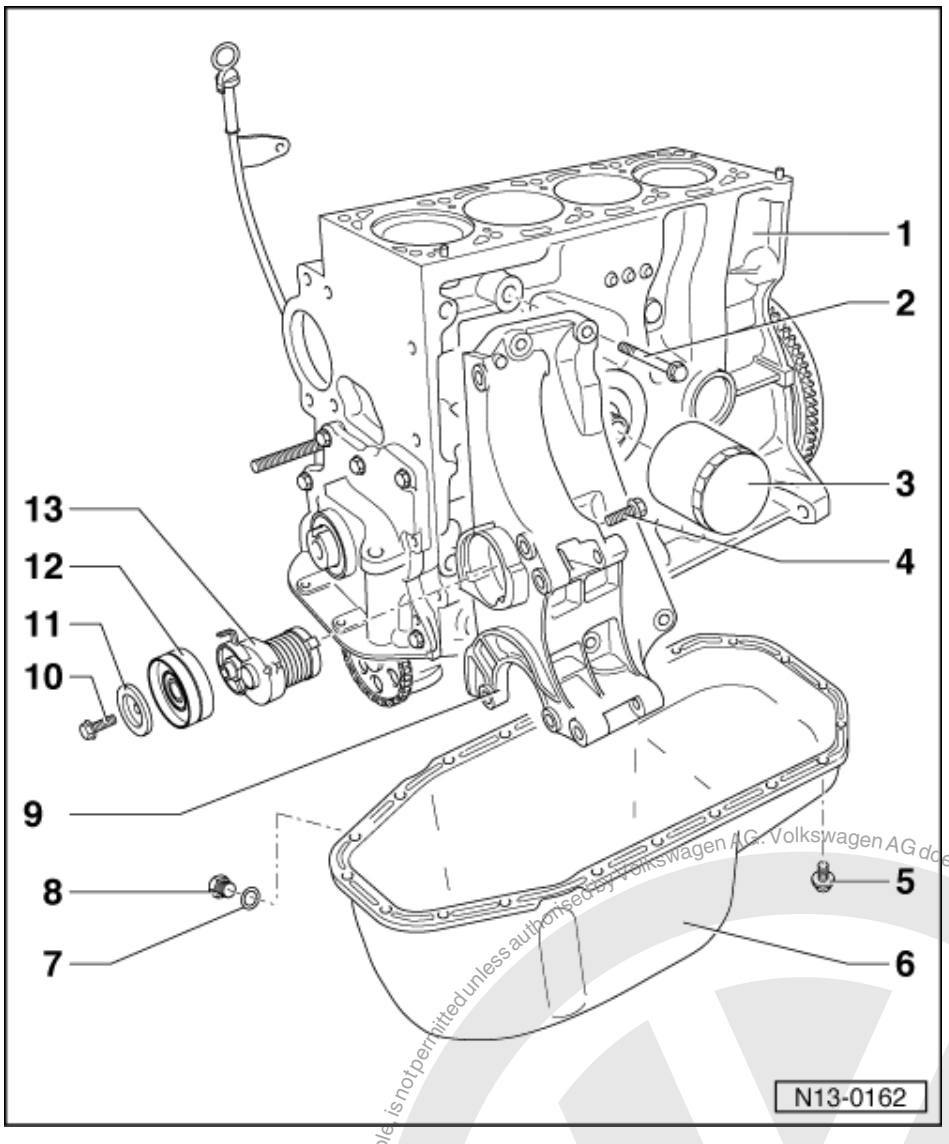

Part III

Note:

Servicing the clutch:

=> 5-Speed manual gearbox 085; Repair group 30; Servicing clutch Servicing clutch

1 Cylinder block
- Dismantling and assembling cylinder block, crankshaft and flywheel
  => Page 21
- Dismantling and assembling pistons and conrods
  => Page 28

2 45 Nm
- Tightening sequence:
  Upper right bolt first, then lower right bolt and bolts on left last (as seen from direction of travel)

Protected by copyright. Copying for private or commercial purposes, in part or in whole, is not permitted unless authorised by Volkswagen AG. Volkswagen AG does not guarantee or accept any liability with respect to the correctness of information in this document. Copyright by Volkswagen AG.
satelettronica

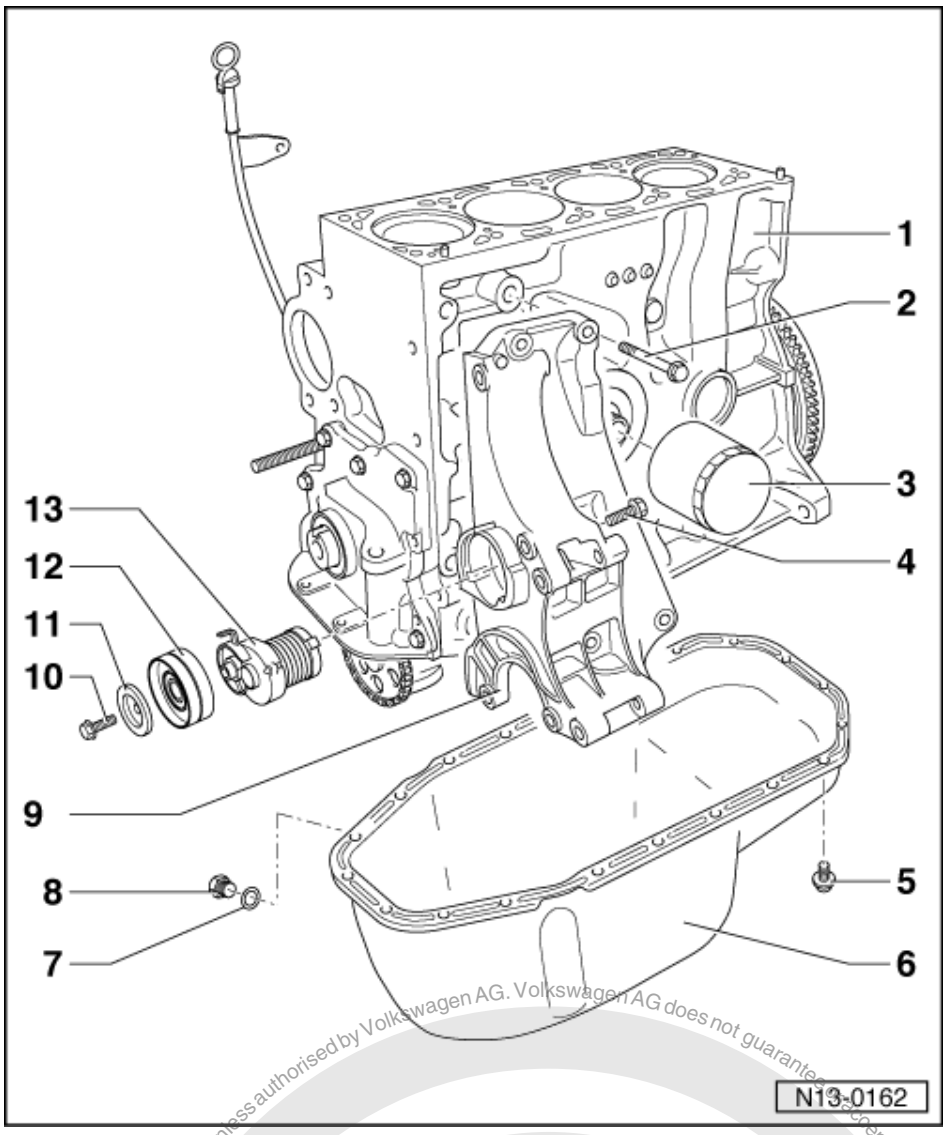

3 **Oil filter**
- Loosen with strap wrench
- Tighten by hand
- Note instructions on filter when installing

4 **20 Nm + 1/4 turn (90 °) further**
- Renew

5 **15 Nm**
- Loosen and tighten the flywheel end bolts only with socket insert 3249

6 **Sump**
- Removing and installing
  => Page 66

7 **Sealing ring**
- Renew

8 **Oil drain plug, 30 Nm**

9 **Bracket**
- For vane pump and alternator

Protected by copyright. Copying for private or commercial purposes, in part or in whole, is not permitted unless authorised by Volkswagen AG. Volkswagen AG does not guarantee or accept any liability with respect to the correctness of information in this document. Copyright by Volkswagen AG.
satelettronica

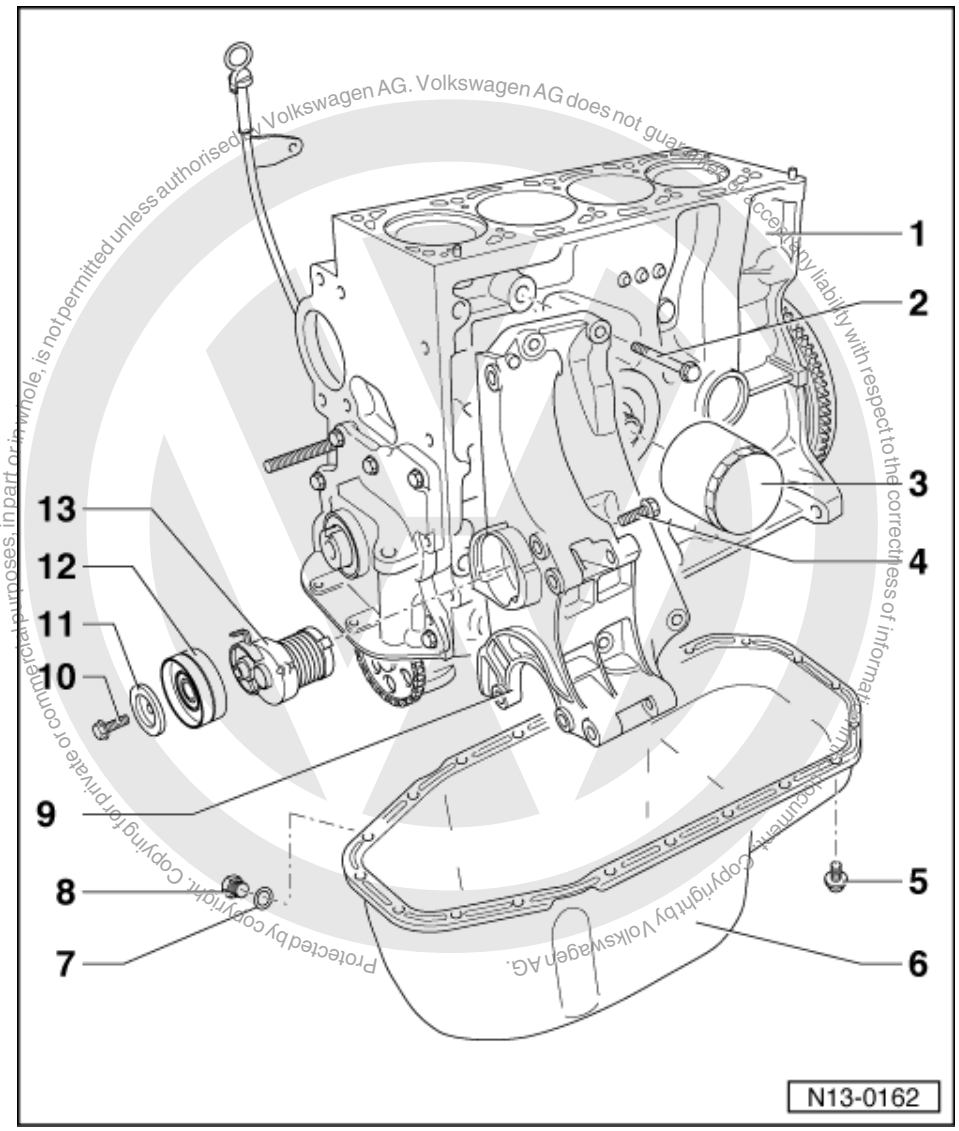

10 45 Nm
11 Washer
12 Tensioning roller
13 Tensioning element

1.2 - Removing and installing ribbed belt

Note:

Before removing the ribbed belt mark the direction of rotation. When installing the belt ensure it is correctly seated in the pulley.

Vehicles without power assisted steering

Special tools, testers, measuring instruments and auxiliary items required

- Tensioning lever 3297

satelettronica

Work sequence

- Loosen alternator securing bolts.

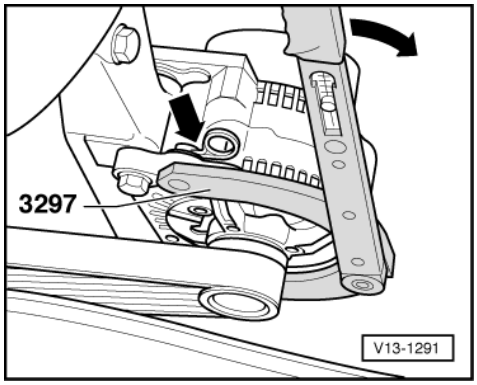

- -> Install tensioning lever 3297, secure with spring clip and swivel alternator down (to turn 3297 use e.g. torque wrench).
- Remove/fit ribbed belt
- After fitting ribbed belt with alternator loose, rotate engine several times (approx. 10 revolutions of engine by operating starter briefly.
- First tighten lower and then upper alternator bolts to 25 Nm.

Vehicles with power assisted steering

- Remove ribbed belt cover.

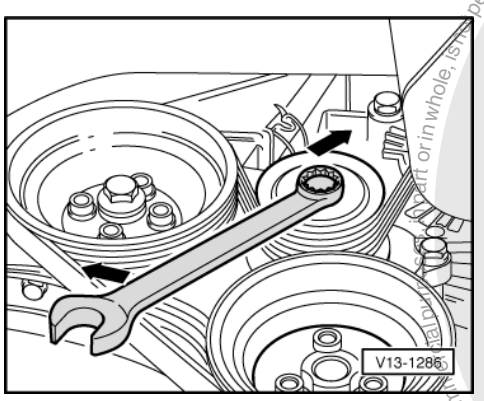

- -> Using a spanner on the securing bolt swivel tensioning roller in direction of arrow.
- Remove/fit ribbed belt.

1.3 - Removing and installing toothed belt

(Adjusting valve timing)

Special tools, testers, measuring instruments and auxiliary items required

- V.A.G 1331 Torque wrench (5...50 Nm)

Removing

- Remove ribbed belt => Page 17 .
- Remove vibration damper and toothed belt guard upper and lower parts.
- Mark D.O.R. of toothed belt.
- Release tensioner and take off toothed belt.

Protected by copyright. Copying for private or commercial purposes, in part or in whole, is not permitted unless authorised by Volkswagen AG. Volkswagen AG does not guarantee or accept any liability with respect to the correctness of information in this document. Copyright by Volkswagen AG.
satelettronica

Photocopy and other reproduction, in whole or in part, for private or commercial purposes, is not permitted unless authorised by Volkswagen AG. Volkswagen AG does not guarantee or accept any liability with respect to the correctness of information in this document. Copyright by Volkswagen AG.

Installing

Prerequisites

- Engine cold

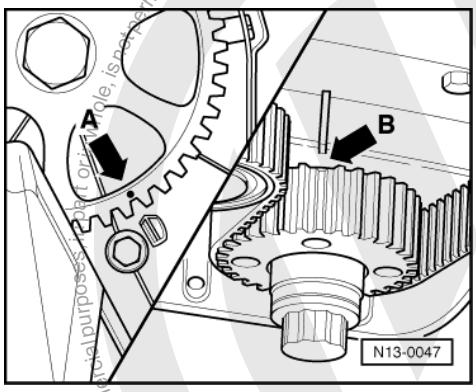

- Pistons not positioned at TDC

Work sequence

Note:

If a piston is at TDC the valves could strike the piston when turning the camshaft.

- -> Set camshaft sprocket to mark -arrow A-.
- Set crankshaft to TDC No. 1 cylinder. The offset tooth on the crankshaft toothed belt pulley must align with the marking on the seal flange -arrow B-.

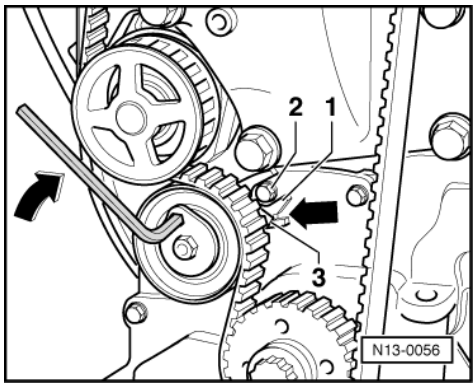

- Fit toothed belt. For used belts note direction of rotation.
- -> Install tensioning roller and tighten securing nut hand-tight. The slot in the base plate -1- must engage over securing bolt -2- .
- Tension toothed belt by turning the tensioning roller in direction of arrow until the indicator -3- aligns with the groove in the base plate -arrow-.
- Tighten clamping nut on tensioning roller.
  Tightening torque: 20 Nm
- Turn crankshaft two complete turns in engine direction of rotation, set again to to TDC and check adjustment.
- Install toothed belt guard upper and lower parts.
- Install belt pulley (note fixing arrangement).
- Install ribbed belt => Page 17 .
- Install ribbed belt cover.
- Check ignition timing, adjust if necessary:

=> Repair group 28; Injection and ignition system; Checking and adjusting ignition timing. Injection and ignition system Checking and adjusting ignition timing.

satelettronica

1.4 - Checking semi-automatic toothed belt tensioning roller

Test conditions

- Toothed belt installed and tensioned

Test sequence

- Turn crankshaft two complete turns in engine direction of rotation and set to TDC.

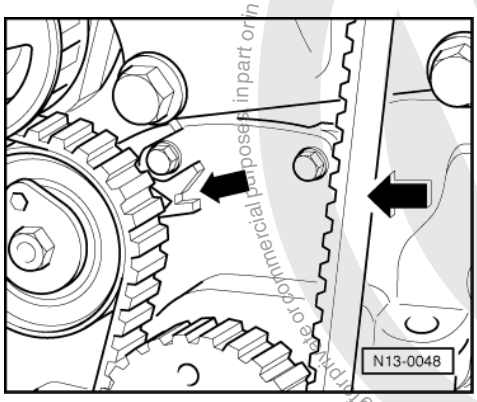

- -> Tension toothed belt with firm thumb pressure.
  The marks on the tensioning roller -arrow- must move apart.
- Release pressure on toothed belt.
- Turn crankshaft two complete turns in engine direction of rotation and set again to TDC. The tensioning roller must have returned to its initial position.

If tensioning roller does not return to initial position:

- Renew tensioning roller.

Volkswagen AG, Wolfsburg, Germany does not guarantee or accept any liability with respect to the correctness of information in this document. Copyright by Volkswagen AG. Protected by copyright. Copying, distribution and storage in any form, in whole or in part, is not permitted unless authorised by Volkswagen AG for commercial purposes.
satelettronica

2 - Dismantling and assembling cylinder block, crankshaft and flywheel

2.1 - Dismantling and assembling cylinder block, crankshaft and flywheel

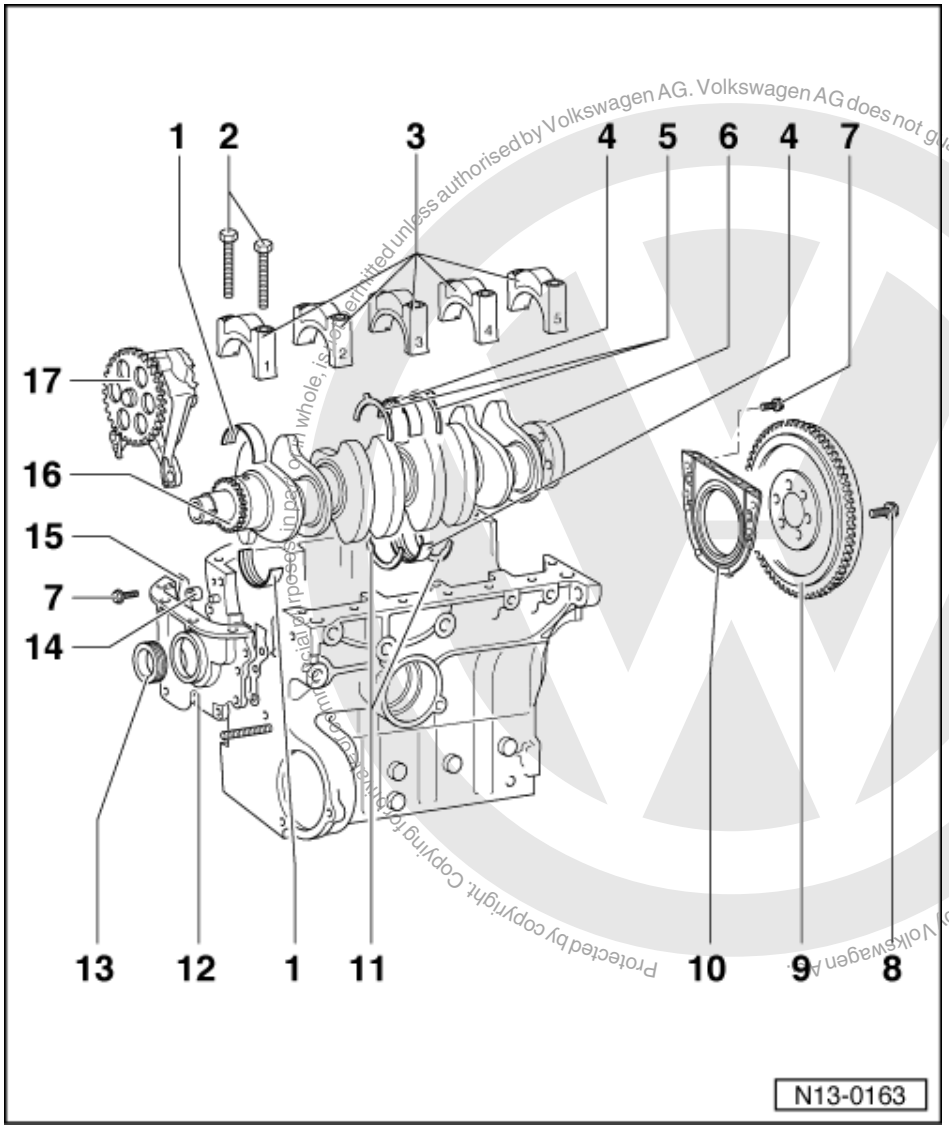

1 Bearing shells 1, 2, 4 and 5
- Do not interchange used bearing shells (mark)

2 65 Nm

3 Bearing cap
- Bearing cap 1: Pulley end
- Bearing cap 3 with recesses for thrust washers
- Bearing shell retaining lugs (cylinder block/bearing cap) must be on the same side

4 Bearing shell 3

5 Thrust washer
- For bearing cap 3
- Note fixing arrangement

Protected by copyright. Copying for private or commercial purposes, in part or in whole, is not permitted unless authorised by Volkswagen AG. Volkswagen AG does not guarantee or accept any liability with respect to the correctness of information in this document. Copyright by Volkswagen AG.
satelettronica

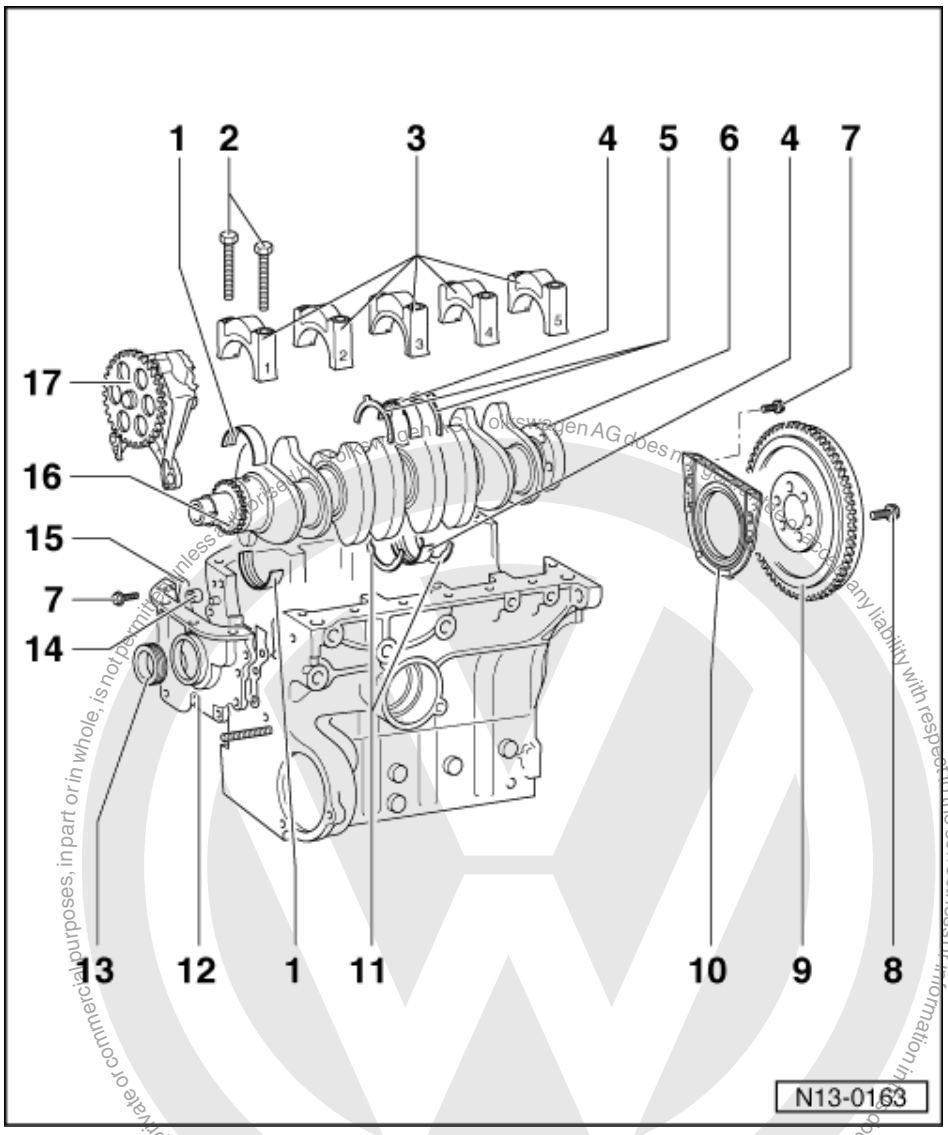

6 Crankshaft
- Axial clearance new: 0.07...0.18 mm
  Wear limit: 0.20 mm
- Check radial clearance with Plastigage
  New: 0.03...0.08 mm
  Wear limit: 0.17 mm
- Do not rotate the crankshaft when checking the radial clearance
- Crankshaft dimensions
  => Page 27

7 10 Nm
- 8 Nm for vehicles with Duo-centric oil pump

8 60 Nm + 1/4 turn (90 °) further
- Renew

9 Flywheel
- To remove and install counter-hold with 10-201

satelettronica

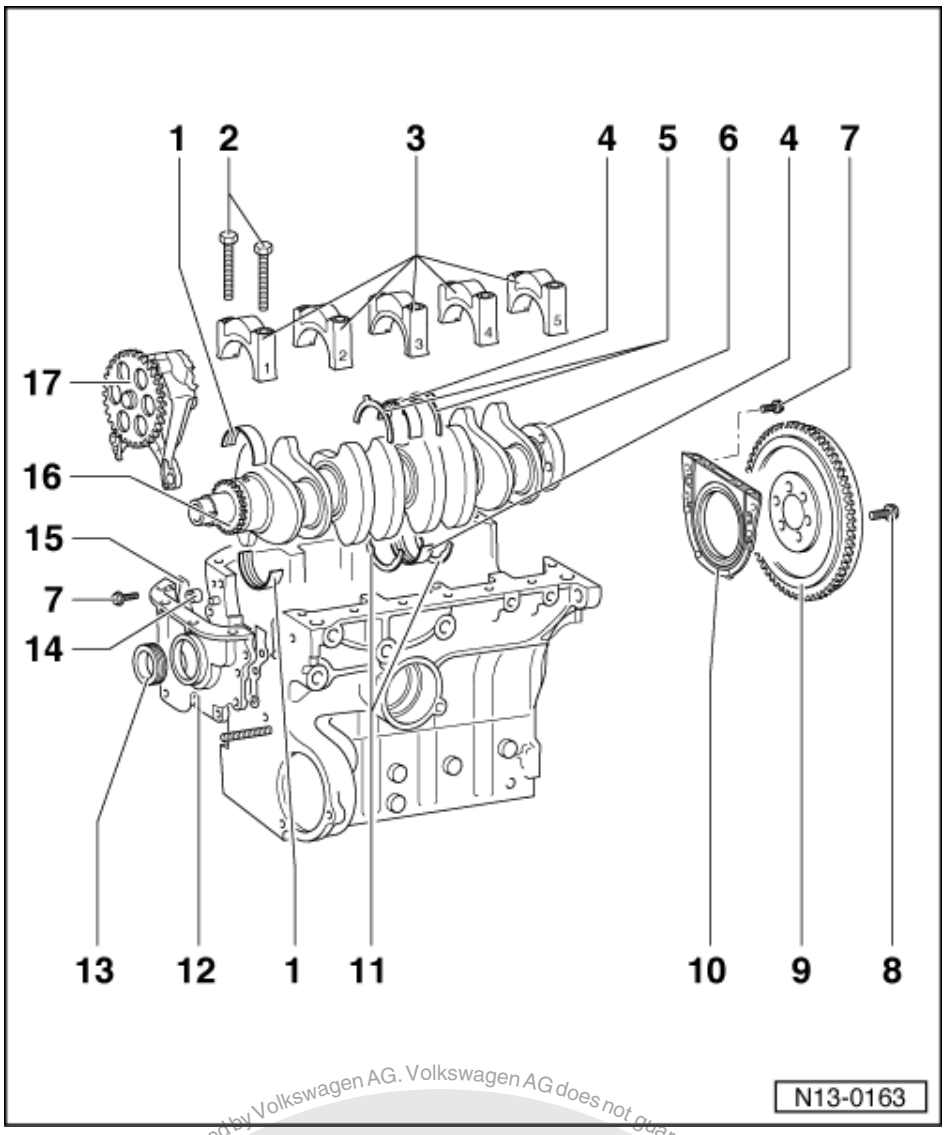

10 Sealing flange with oil seal
- Only renew complete
- For spare part sealing flange, do not additionally oil sealing lip
- The sealing flange replacement part does not have an integral gasket and must be installed with a normal gasket.
- Fit spare part sealing flange with supplied sleeve

11 Thrust washer
- For cylinder block, bearing 3

12 Sealing flange/Duo-centric oil pump
- Removing and installing Duo-centric oil pump => Page 68

13 Oil seal
- Renewing => Page 24

14 Sealing bush
- Only oil pump driven by chain
- Renew if damaged
- Insert in sealing flange first
- Oil to install

Protected by copyright. Copying for private or commercial purposes, in part or in whole, is not permitted unless authorised by Volkswagen AG. Volkswagen AG does not guarantee or accept any liability with respect to the correctness of information in this document. Copyright by Volkswagen AG.

satelettronica

Printed by Volkswagen AG. Volkswagen AG does not guarantee or accept any liability with respect to the correctness of information in this document. Copyright by Volkswagen AG. Printing for commercial purposes, in part or in whole, is not permitted unless authorised by Volkswagen AG.

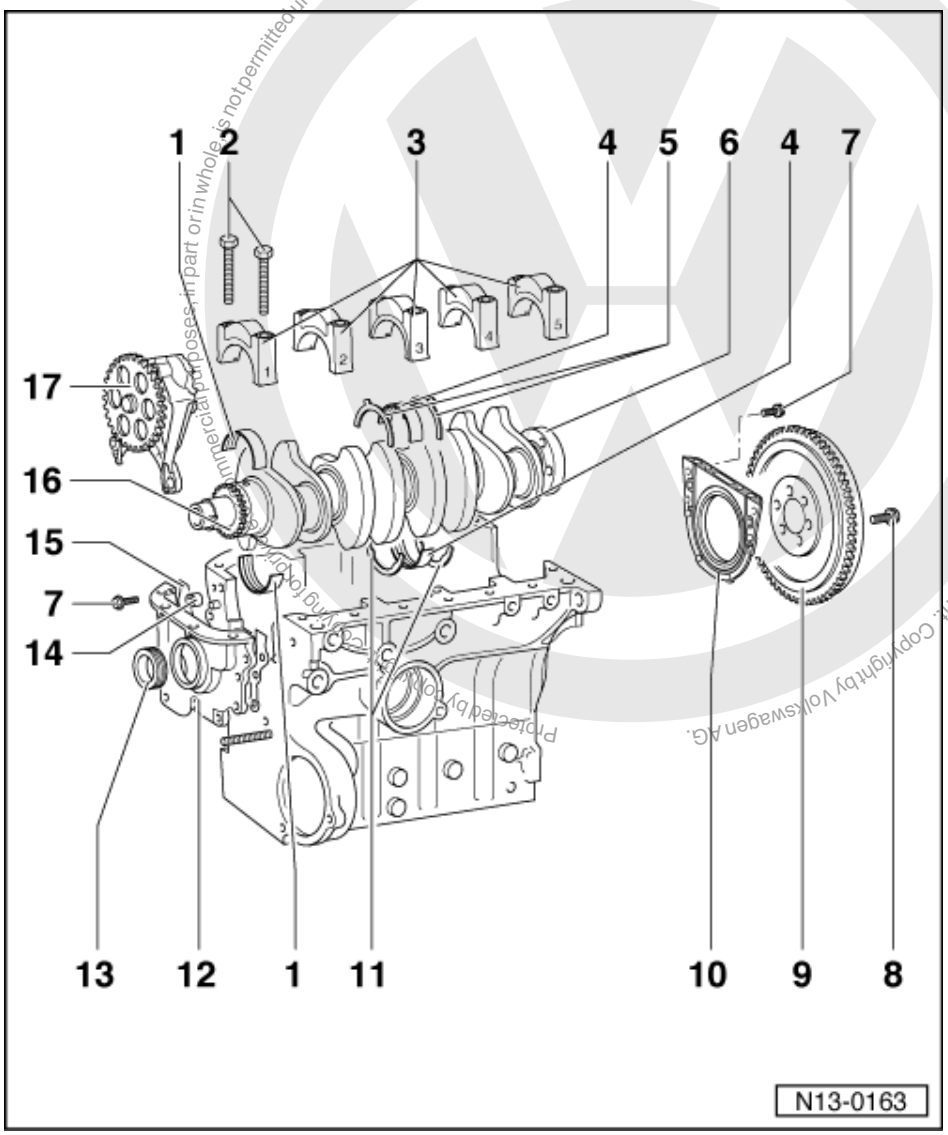

15 Gasket
- Renew

16 Chain sprocket
- For oil pump drive

17 Oil pump
- Removing and installing
  => Page 58
- Removing and installing for vehicles with Duo-centric oil pump => Page 68

2.2 - Renewing crankshaft oil seal - pulley end -

Vehicles with oil pump driven by chain and vehicles with Duo-centric oil pump => Page 26

Special tools, workshop equipment, testers, measuring instruments and auxiliary items required

- Engine support bracket 10-222A with legs 10-222A/1
- 3415 or 3099 Counter-hold tool
- 2085 Oil seal extractor
- 3083 Oil seal fitting tool
- V.A.G 1331 (5...50 Nm) Torque wrench

satelettronica

- V.A.G 1332 (40...200 Nm) Torque wrench

Removing

- First remove toothed belt
  => Page 18 .
- Then remove crankshaft toothed belt sprocket. To do this secure counter-hold tool 3415 or 3099 to toothed belt sprocket.
- To guide oil seal extractor screw crankshaft sprocket securing bolt into crankshaft onto stop.
- Unscrew inner part of the oil seal extractor 2085 two turns (approx. 3 mm) out of the outer part and lock with knurled screw.

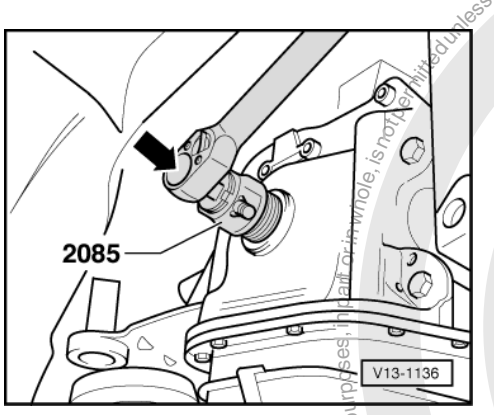

- -> Lubricate threaded head of oil seal extractor, place it in position and exerting firm pressure screw it as far as possible into oil seal.
- Loosen knurled screw and turn inner part against crankshaft until the oil seal is pulled out.

Installing

- Lightly oil sealing lip of oil seal.
- Fit guide sleeve from 3083 onto crankshaft journal.
- Slide oil seal over guide sleeve.

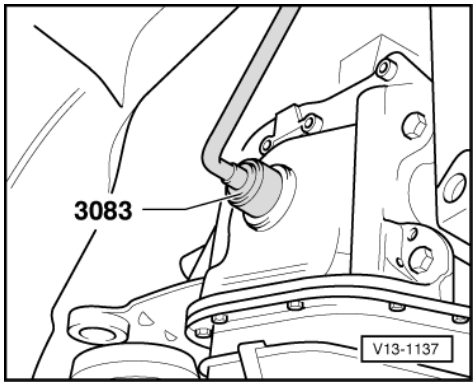

- -> Press oil seal in flush with press sleeve from 3083.
- Install toothed belt => Page 18

Protected by copyright. Copying for private or commercial purposes, in part or in whole, is not permitted unless authorised by Volkswagen AG. Volkswagen AG does not guarantee or accept any liability with respect to the correctness of information in this document. Copyright by Volkswagen AG.
satelettronica

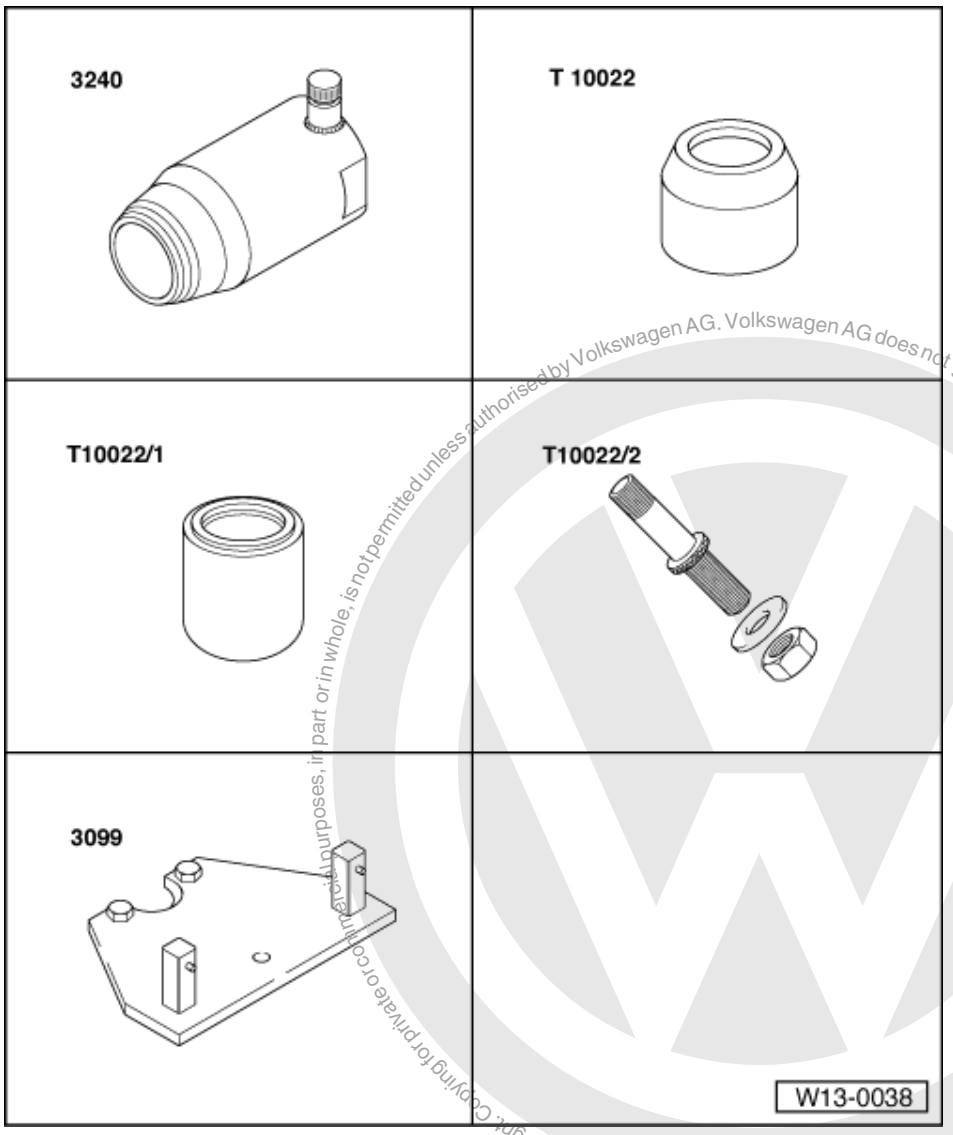

Protected by copyright. Copying for private or commercial purposes, in part or in whole, is not permitted unless authorised by Volkswagen AG. Volkswagen AG does not guarantee or accept any liability with respect to the correctness of information in this document. Copyright by Volkswagen AG.

satelettronica

Vehicles with Duo-centric oil pump

Special tools, workshop equipment, test and measuring appliances and auxiliary items required

- 3240 Oil seal extractor
- T10022 Sleeve
- T10022/1 Press piece
- T10022/2 Spindle
- 3099 Counter-hold tool

Removing

- First remove toothed belt
  => Page 18 .
- Then remove crankshaft toothed belt sprocket. To do this secure counter-hold tool 3415 or 3099 to toothed belt sprocket.
- To guide oil seal extractor screw crankshaft sprocket securing bolt into crankshaft onto stop.
- Unscrew inner part of oil seal extractor 3240 two turns (approx. 3 mm) out of the outer part and lock with knurled screw.

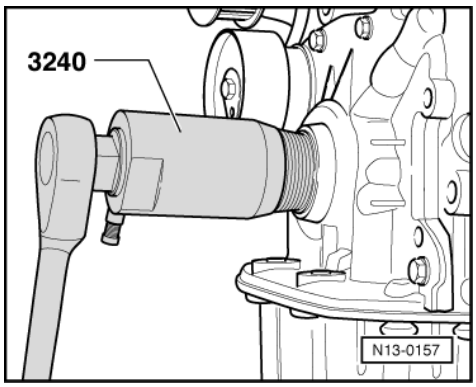

- -> Lubricate threaded head of oil seal extractor, place it in position and exerting firm pressure screw it as far as possible into oil seal.
- Loosen knurled screw and turn inner part against crankshaft until the oil seal is pulled out.

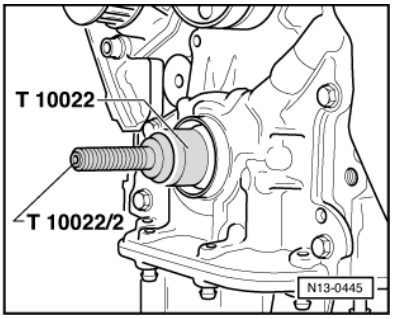

Installing

- Lightly oil sealing lip of oil seal.
- -> Fit sleeve T10022 onto crankshaft journal and tighten with spindle T10022/2 onto stop.
- Slide oil seal over sleeve T10022.

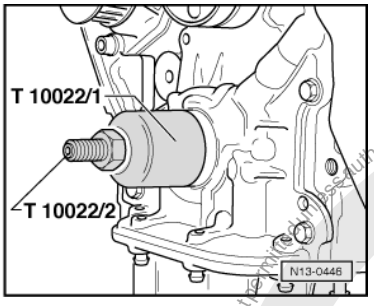

- -> Press in oil seal onto stop with press piece T10022/1.
- Install toothed belt => Page 18
- Then install crankshaft toothed belt sprocket. To do this secure counter-hold tool 3099 to toothed belt sprocket.

2.3 - Crankshaft dimensions

Honing dimension in mm	Crankshaft main journal ø	Conrod journal ø
Basic dimension	-0.022 54.00 -0.037	-0.022 47.80 -0.037
1st undersize	-0.022 53.75 -0.037	-0.022 47.55 -0.037

Protected by copyright. Copying for private or commercial purposes, in part or in whole, is not permitted unless authorised by Volkswagen AG. Volkswagen AG does not guarantee or accept any liability with respect to the correctness of information in this document. Copyright by Volkswagen AG.
satelettronica

Honing dimension in mm	Crankshaft main journal ø	Conrod journal ø
2nd undersize	-0.022 53.50 -0.037	-0.022 47.30 -0.037
3rd undersize	-0.022 53.25 -0.037	-0.022 47.05 -0.037

3 - Dismantling and assembling pistons and conrods

3.1 - Dismantling and assembling pistons and conrods

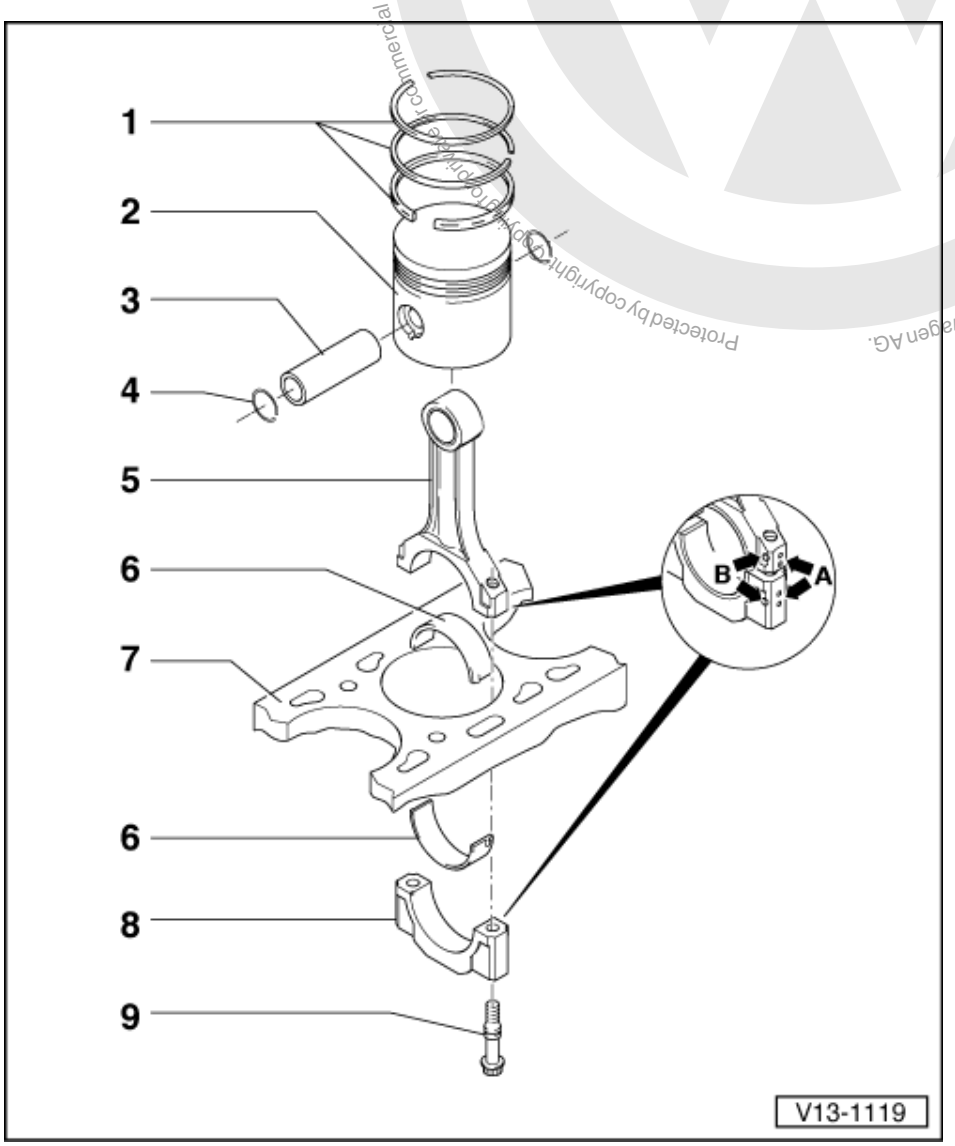

1 Piston ring
- Offset gaps by 120 °
- Remove and install with piston ring pliers
- Carefully remove and install 3-part oil scraper rings by hand
- "TOP" faces towards piston crown
- Checking ring gap=> Fig. 1
- Checking ring to groove clearance
  => Fig. 2

2 Piston

Protected by copyright. Copyright by Volkswagen AG. Volkswagen AG does not guarantee or accept any liability with respect to the correctness of information in this document. Copyright by Volkswagen AG. Not permitted unless authorised by Volkswagen AG. Volkswagen AG does not guarantee or accept any liability with respect to the correctness of information in this document. Copyright by Volkswagen AG.
satelettronica

- Checking => Fig. 3
- Mark installation position and cylinder number
- Arrow on piston crown points to pulley end
- Install using piston ring clamp

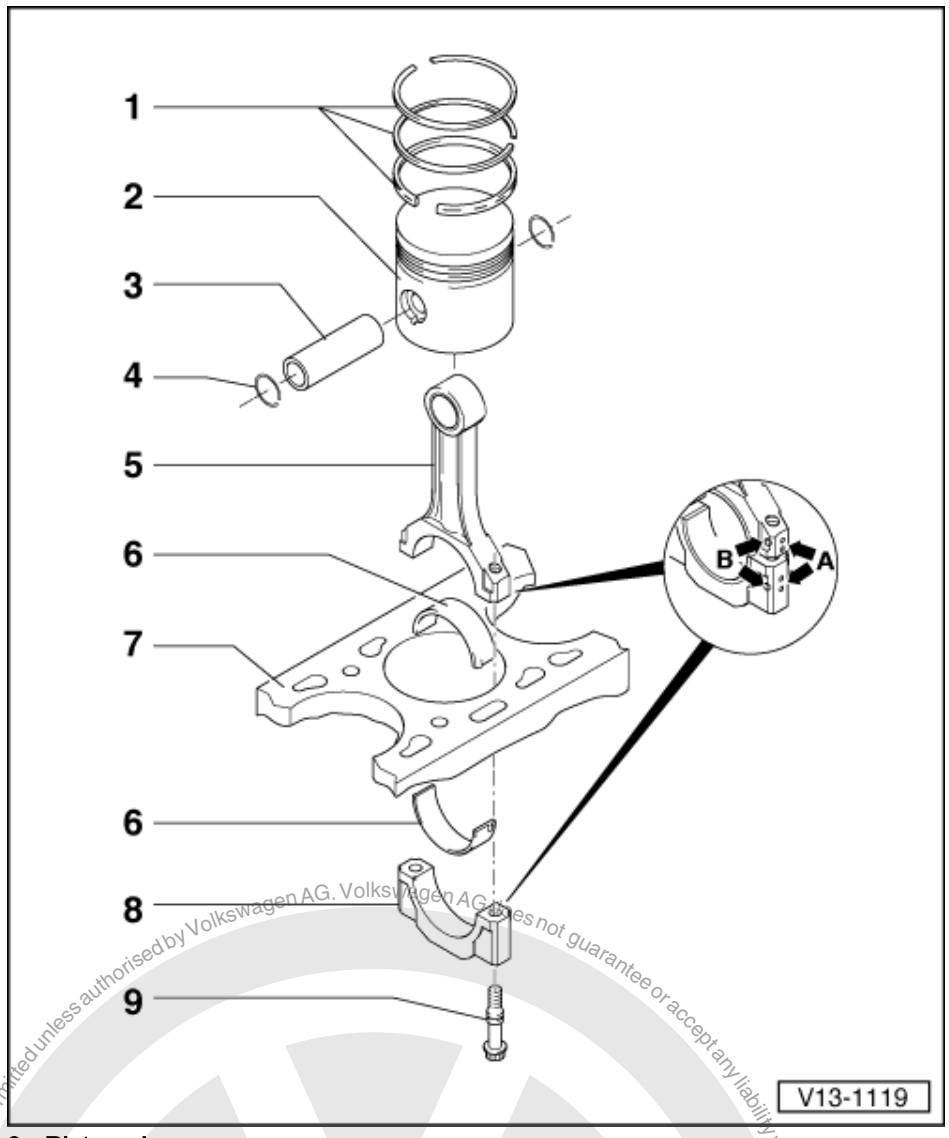

3 Piston pin
- If difficult to remove, heat piston to 60 °C
- Remove and install with 10-14

4 Circlip

5 Conrod
- Only renew as a set
- Mark cylinder number -A-
- Installation position:
  Marking -B- faces towards pulley end
- Guided axially via piston

6 Bearing shell
- Insert bearing shells centrally
- Do not interchange used bearing shells
- Measure pretension
  => Fig. 5
- Check radial clearance with Plastigage:
  New: 0.020...0.061 mm
  Wear limit: 0.091 mm

Protected by copyright. Copying for private or commercial purposes, in part or in whole, is not permitted unless authorised by Volkswagen AG. Volkswagen AG does not guarantee or accept any liability with respect to the correctness of information in this document. Copyright by Volkswagen AG.
satelettronica

Do not rotate crankshaft when checking radial clearance

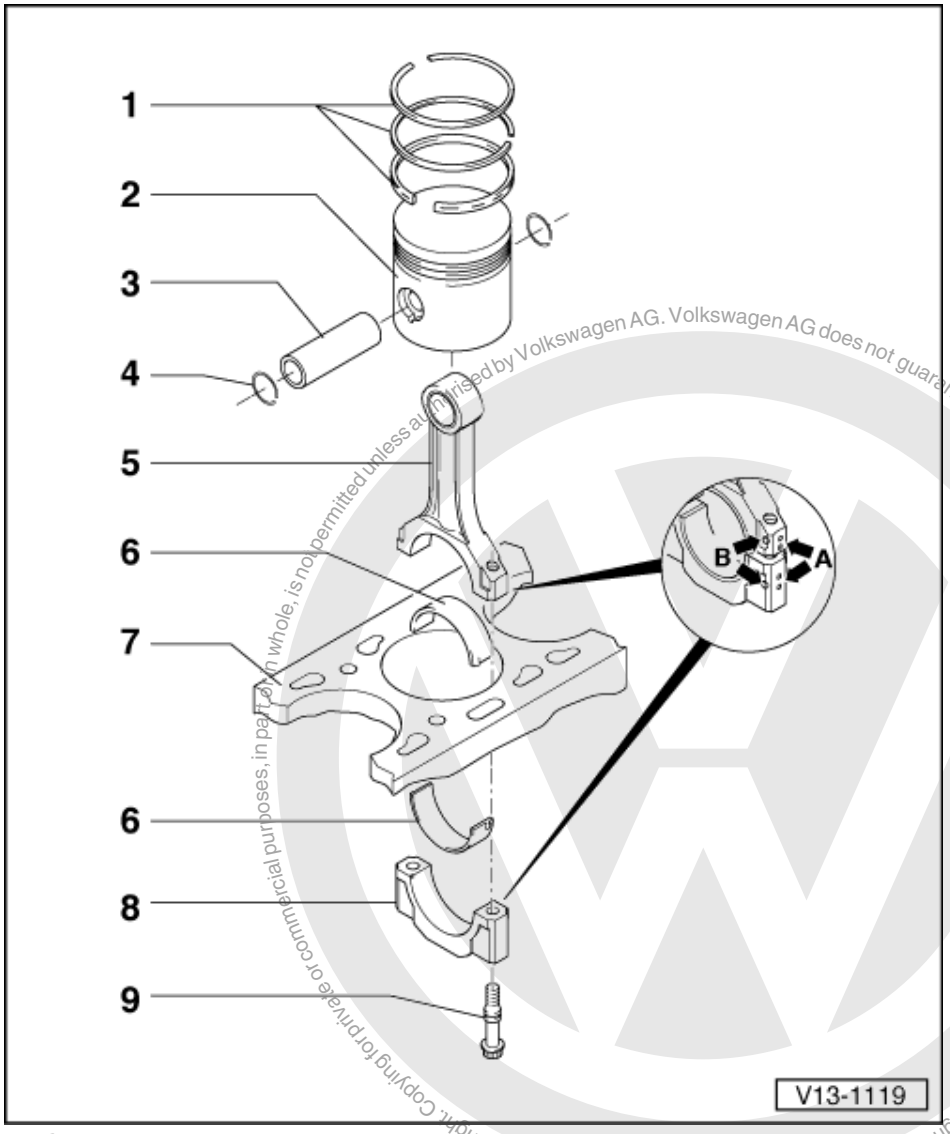

Protected by copyright. Copying for private or commercial purposes, in part or in whole, is not permitted unless authorised by Volkswagen AG. Volkswagen AG does not guarantee or accept any liability with respect to the correctness of information in this document. Copyright by Volkswagen AG.

satelettronica

7 Cylinder block
- Checking cylinder bores
  =>Fig. 4
- Piston and cylinder dimensions
  =>Page 33

8 Conrod bearing cap
- Note installation position
- The caps only fit in one position and only on the appropriate con-rod, this is due to the breaking procedure (cracking) separating the cap from the con-rod

9 Conrod bolt
M8: 30 Nm + 1/4 turn (90 °) further
M7: 20 Nm + 1/4 turn (90 °) further
- Renew
- Oil threads and contact surface
- To measure radial clearance tighten to 20 or 30 Nm but not further

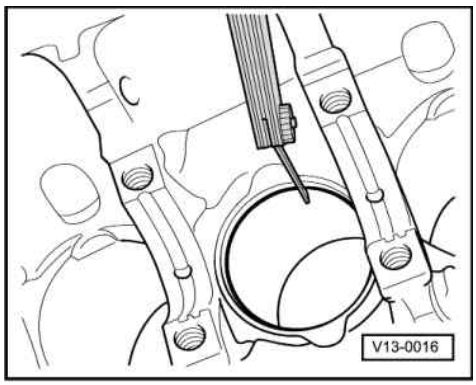

-> Fig. 1 Checking piston ring gap

- Push ring squarely from above down to approx. 15 mm from bottom end of cylinder.

Piston ring	Wear limit
Compression rings	1.0 mm
Oils scraper ring 1-part 3-part	1.0 mm ---1)

1) No wear limit details

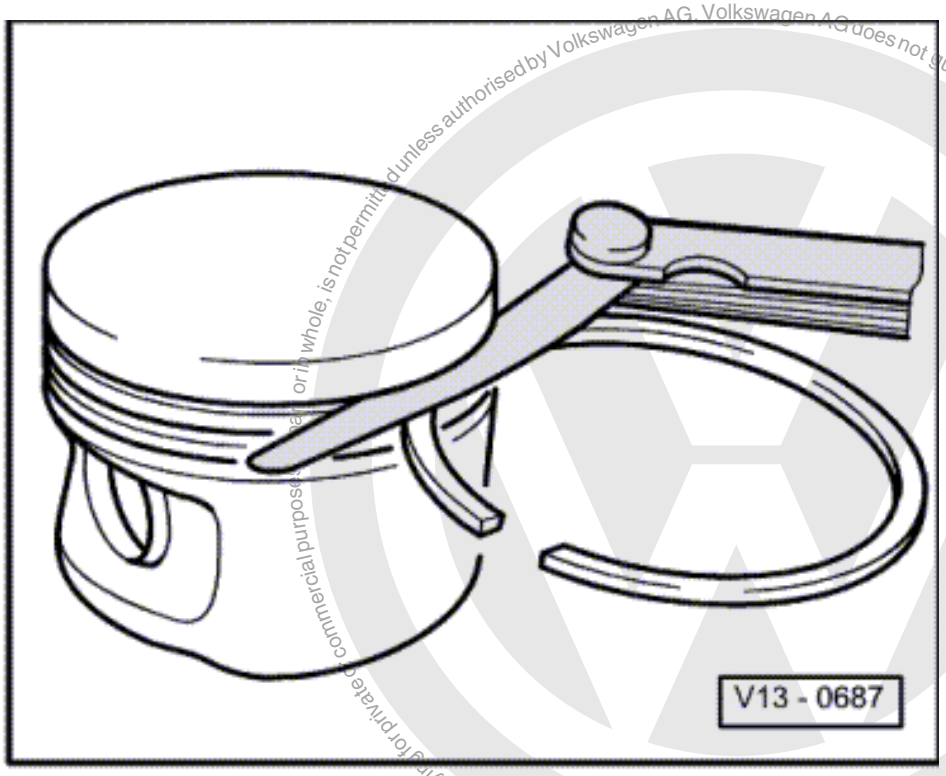

-> Fig. 2 Checking ring to groove clearance

Clean groove before check.

Piston ring	Wear limit
Compression rings	0.15 mm

satelettronica
Protected by copyright. Copying for private or commercial purposes, in part or in whole, is not permitted unless authorised by Volkswagen AG. Volkswagen AG does not guarantee or accept any liability with respect to the correctness of information in this document. Copyright by Volkswagen AG.

Piston ring	Wear limit
Oil scraper ring 1-part 3-part	0.15 mm not measurable

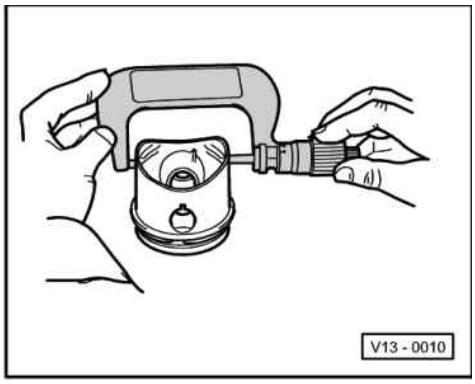

-> Fig. 3 Checking piston

Special tools, testers, measuring instruments and auxiliary items required

- Micrometer 75...100 mm

- Approx. 10 mm from lower edge and offset 90 ° to piston pin axis. Deviations from nominal dimensions max. 0.04 mm

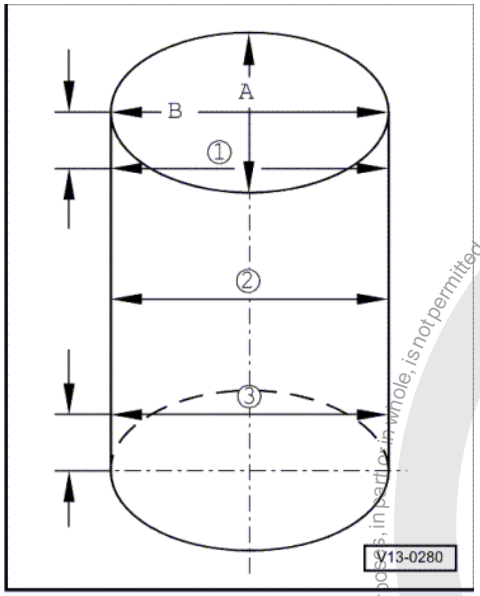

-> Fig. 4 Checking cylinder bores

Special tools, testers, measuring instruments and auxiliary items required

- Internal dial gauge 50...100 mm

- Take measurements at 3 positions in both lateral -A- and longitudinal -B- directions, as illustrated. Deviation from nominal dimension max. 0.08 mm

Protected by copyright. Copying for private or commercial purposes, in part or in whole, is not permitted unless authorised by Volkswagen AG. Volkswagen AG does not guarantee or accept any liability with respect to the correctness of information in this document. Copyright by Volkswagen AG.
satelettronica

Note:

Measuring the cylinder bores must not be done when the cylinder block is mounted on a repair stand with adapter bracket VW 540, as incorrect measurements would then be possible.

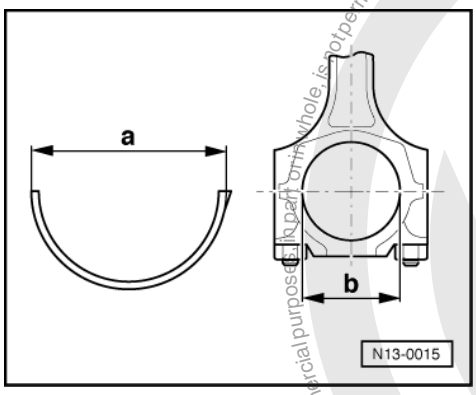

-> Fig. 5 Measuring bearing shell pretension

Special tools, testers, measuring instruments and auxiliary items required

- Vernier caliper

The bearing shell pretension is calculated as follows:

Bearing shell dimension -a-
- Conrod diameter -b-
= Pretension

Minimum dimension: 1.5 mm

If the pretension is not achieved:

- Renew bearing shells.

3.2 - Piston and cylinder dimensions

Honing dimension		Piston-ø	Cylinder bore-ø
Basic dimen.	mm	76.470	76.51
1st oversize	mm	76.720	76.76
2nd oversize	mm	76.970	77.01
2nd oversize	mm	77.220	77.26

Protected by copyright. Copying for private or commercial purposes, in part or in whole, is not permitted unless authorised by Volkswagen AG. Volkswagen AG does not guarantee or accept any liability with respect to the correctness of information in this document. Copyright by Volkswagen AG.
satelettronica

15 - Cylinder head, Valve gear

1 - Removing and installing cylinder head

1.1 - Removing and installing cylinder head

Checking compressions=> Page 40

Notes:

- When installing an exchange cylinder head with fitted camshaft, the contact surfaces between the bucket tappets and the cam must be oiled before installing the cylinder head cover.
- The plastic packing pieces for protecting the open valves must not be removed until immediately before fitting cylinder head.
- If the cylinder head is replaced, all the coolant in the system must also be renewed.

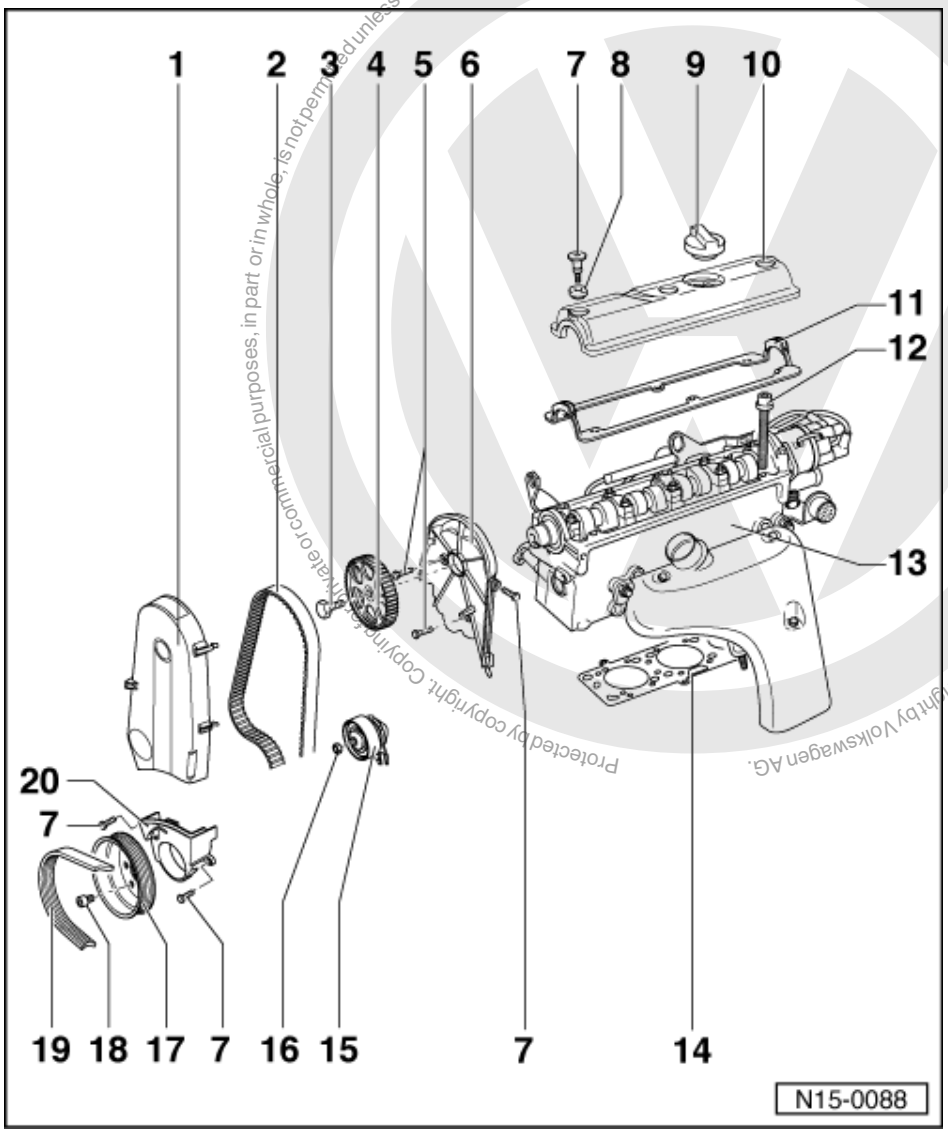

1 Toothed belt guard - upper part
2 Toothed belt
- Check for wear
- Do not kink

satelettronica

- Removing and installing
  => Page 18

3 20 Nm + 1/4 turn (90 °) further
- Renew

4 Camshaft sprocket
- Note position when installing the toothed belt
  => Page 18

5 10 Nm
- Install with D6

6 Rear toothed belt guard

7 Cylinder head cover: 5 Nm + 1/4 turn (90 °) further
toothed belt guard: 10 Nm
- Renew cylinder head cover bolts

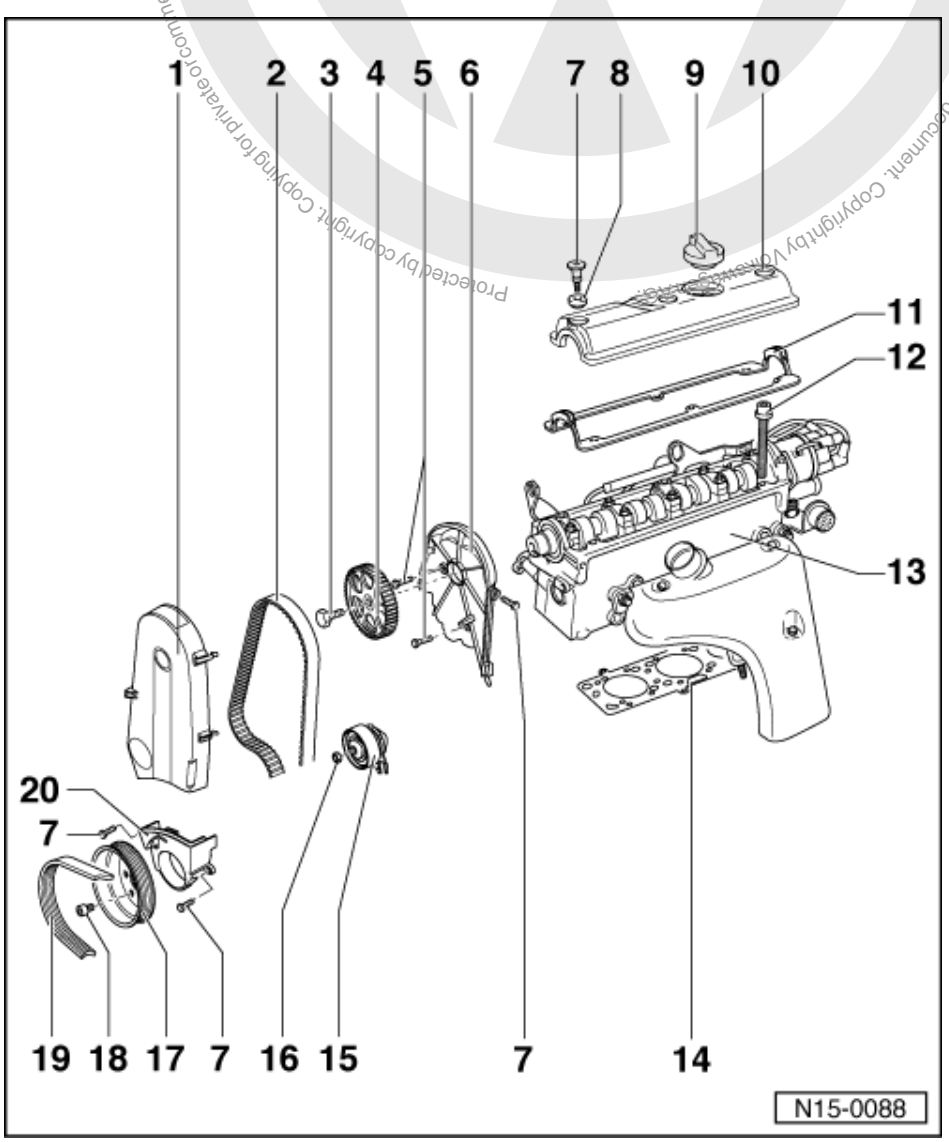

8 Sealing washer
- Renew

9 Cap
- Renew seal if damaged

10 Cylinder head cover

11 Cylinder head cover gasket
- Renew if damaged
- Before fitting gasket coat transition between bearing cap/cylinder head with D 454 300 A2

satelettronica

Copyright by Volkswagen AG. Volkswagen AG does not guarantee or accept any liability with respect to the correctness of information in this document. Copyright by Volkswagen AG. Copying for private or commercial purposes, in part or in whole, is not permitted unless authorised by Volkswagen AG.

12 Cylinder head bolt
- Renew
- Knurled bolt head
- Sequence when loosening and tightening
  => Page 38 ; Removing and installing cylinder head

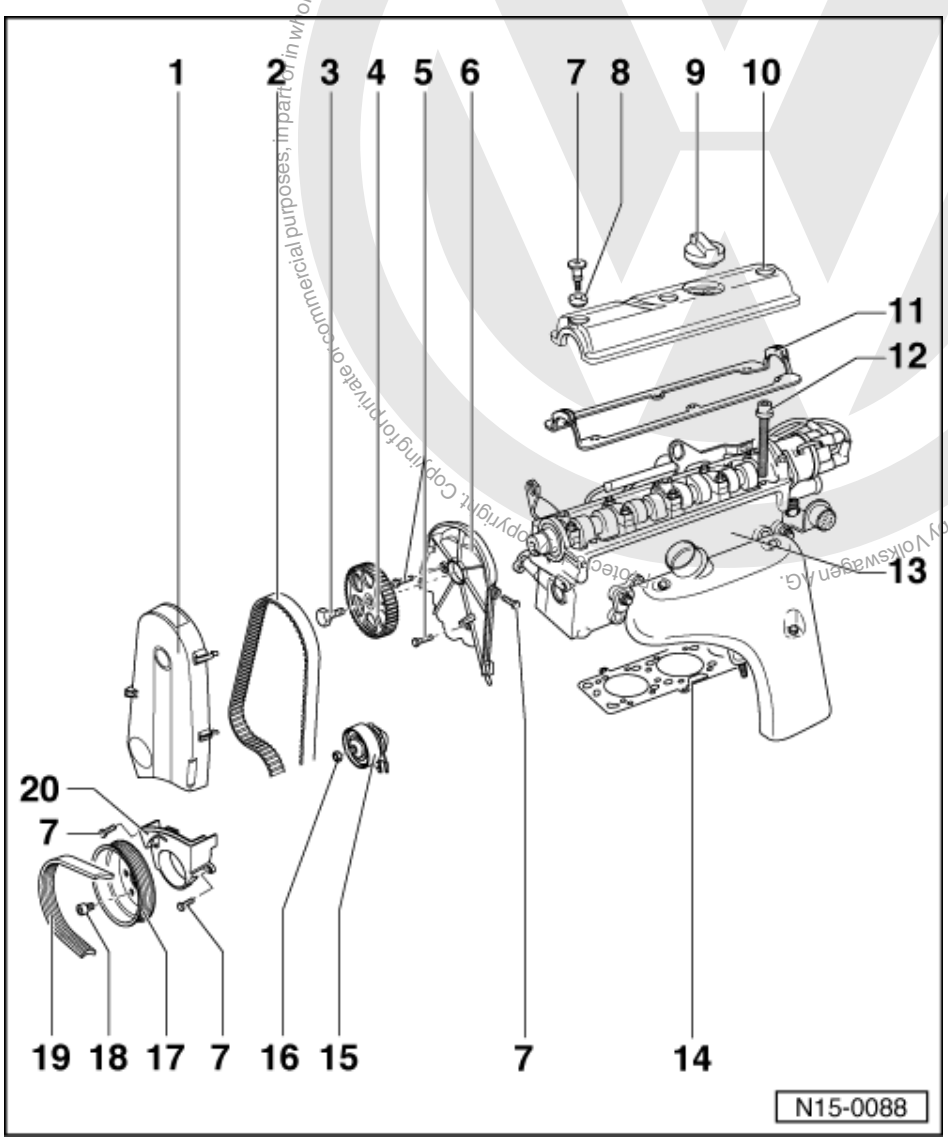

13 Cylinder head
- Check for distortion => Fig. 1
- Removing and installing
  => Page 38
- After replacing renew the complete coolant

14 Cylinder head gasket
- Renew
- Metal gasket
- After replacing renew the complete coolant

15 Tensioner
- Tensioning toothed belts
  => Page 18

16 20 Nm

17 Belt pulley
- When installing note fixing arrangement
- Note position when installing toothed belt

satelettronica

=> Page 18

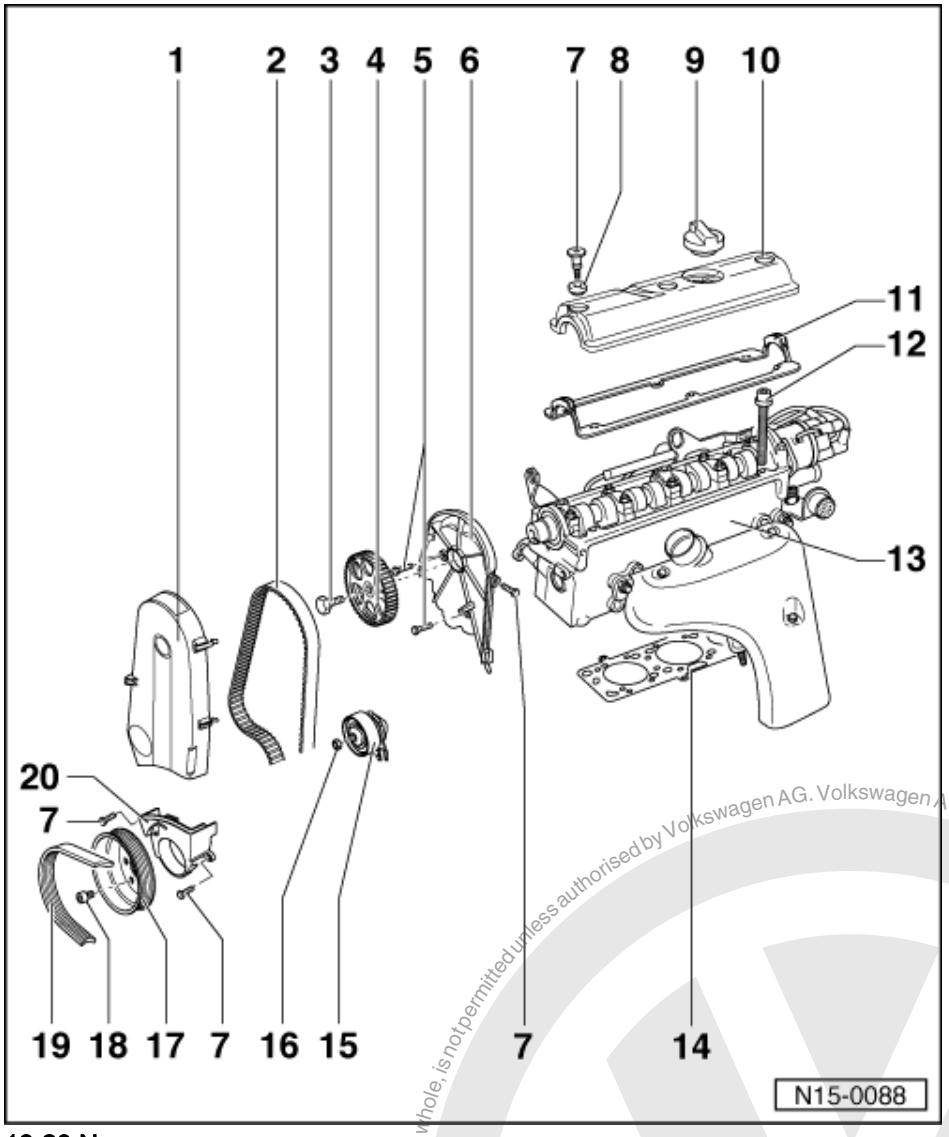

18 20 Nm

19 Ribbed belt

- Mark direction of rotation before removing
- Removing and installing
  => Page 17

20 Toothed belt guard - lower part

Protected by copyright. Copying for private or commercial purposes, in part or in whole, is not permitted unless authorised by Volkswagen AG. Volkswagen AG does not guarantee or accept any liability with respect to the correctness of information in this document. Copyright by Volkswagen AG.
satelettronica

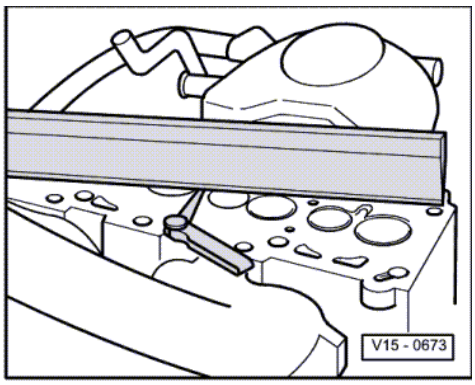

-> Fig. 1 Checking cylinder head for distortion

Max. permissible distortion: 0.05 mm

1.2 - Removing and installing cylinder head

Special tools, testers, measuring instruments and auxiliary items required

- Drip tray V.A.G 1306
- Pliers V.A.G 1921 for spring type clips
- Counter-hold tool 3036
- Guide pin 3070
- V.A.G 1332 Torque wrench (40...200 Nm)

Prerequisites

- The engine must be no more than warm to touch.
- The pistons must not be positioned at TDC.

Removing

- First check whether a coded radio is fitted. If this is the case obtain the anti-theft coding.
- First disconnect battery earth band, with the ignition switched off.

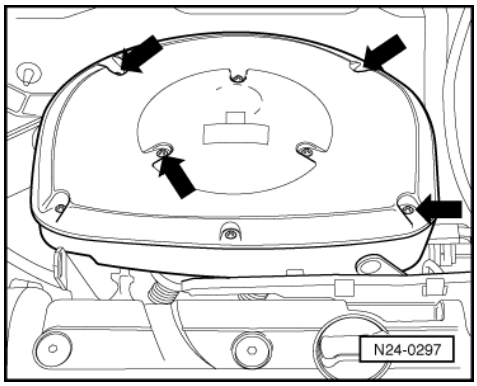

- -> Remove air cleaner. To do this remove bolts marked with an arrow.

Note:

If the securing screws are loosened or tightened with a power tool the thread in the intake pipe can be damaged. Therefore the use of a power tool is only permissible when:

Protected by copyright. Copyright Volkswagen AG.
Copying for private or commercial purposes, in part or in whole, is not permitted unless authorised by Volkswagen AG. Volkswagen AG does not guarantee or accept any liability with respect to the correctness of information in this document.
satelettronica

- The power tool speed is max. 200 rpm
- The tightening torque is set to max. 3 Nm

- Drain coolant => Page 80 .
- Loosen spring clamps and pull coolant hoses off coolant thermostat housing.
- Loosen or separate the following components:
  - Central electrics connector
  - accelerator cable
  - High tension cable terminal 4 from distributor cap
  - Hose to activated charcoal filter at connection on suspension turret
  - The vacuum hose to brake servo on inlet manifold
  - The earth strap to ignition transformer on bracket
  - The 2 pin connector from knock sensor (rear of cylinder block)
- Separate fuel supply as well as fuel return pipes at connection on suspension turret. The fuel system is under pressure, therefore place a cloth over the connection before the hose is pulled off.
- Seal the pipes so that the fuel system is not contaminated by dirt etc.
- Separate front exhaust pipe from exhaust manifold.
- Remove ribbed V-belt => Page 17 .
- Remove belt pulley as well as upper and lower toothed belt guard.
- Loosen toothed belt tensioning roller and remove toothed belt.
- Unbolt toothed belt pulley from camshaft. To ensure that the camshaft does not move, hold camshaft pulley with counterhold 3036.
- Remove rear toothed belt guard from cylinder head.
- Pull coolant pump/coolant thermostat housing coolant hose clamps off from housing.
- Remove cylinder head cover.

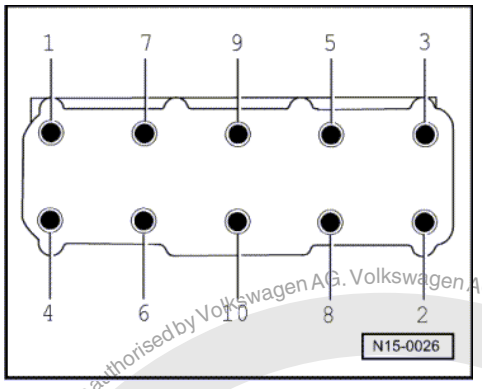

- -> Remove cylinder head bolts in prescribed sequence and carefully remove cylinder head.

Installing

Notes:

- Only remove the new cylinder head gasket from its packing immediately before installing.
- Handle the new gasket with extreme care. Damaging will lead to leaks.

- Place a clean cloth in cylinder so that no dirt or emery remains can enter between cylinder surface and piston.
- Also prevent dirt and emery cloth particles from getting into the coolant.
- Carefully clean cylinder head and cylinder block sealing surfaces. Thereby ensuring that no scoring or scratches are formed (when using abrasive paper the grade must not be less than 100).
- Carefully remove metal particles, emery remains and cloths.

Protected by copyright. Copying for private or commercial purposes, in part or in whole, is not permitted unless authorised by Volkswagen AG. Volkswagen AG does not guarantee or accept any liability with respect to the correctness of information in this document. Copyright by Volkswagen AG.
satelettronica

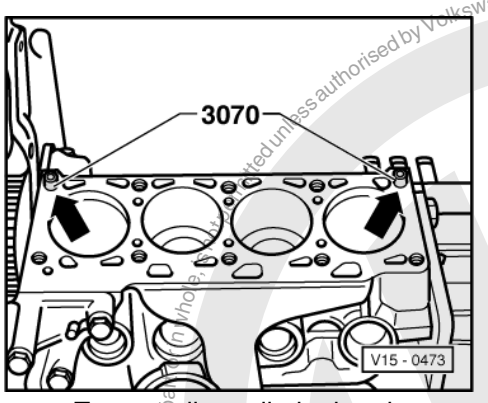

- -> To centralize cylinder head, screw guide pins from 3070 into holes for rear outer cylinder head bolts - arrows-.
- Fit new cylinder head gasket. Lettering (Part No.) must be readable.
- Fit cylinder head, screw in the 8 cylinder head bolts available and tighten hand-tight.
- Unscrew guide pins through bolt hole using pin driver from 3070. To do this turn pin driver anti-clockwise until the pins are free.
- Fit remaining cylinder head bolts and tighten hand-tight.

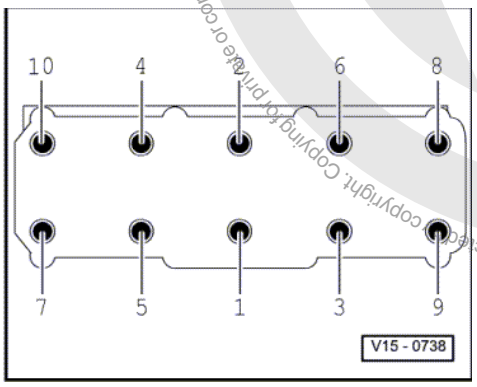

- -> Tighten cylinder head in four stages in prescribed tightening torque sequence shown, as follows:
- Pretighten all bolts to 40 Nm.
- Then tighten all bolts to 60 Nm.
- Then tighten all bolts a 1/4 turn (90 °) further using a rigid wrench.
- Then tighten all bolts again a 1/4 turn (90 °) further.

The rest of the assembly is basically a reverse of the dismantling sequence.

Installing toothed belt and adjusting timing => Page 18 .

Filling with new coolant => Page 80 .

1.3 - Checking compressions

Special tools, testers, measuring instruments and auxiliary items required

- Compression tester V.A.G 1381 or V.A.G 1763

Protected copyright. Copying for private or commercial purposes, in whole or in part, is not permitted unless authorised by Volkswagen AG. Volkswagen AG does not guarantee or accept any liability with respect to the correctness of information in this document. Copyright by Volkswagen AG.
satelettronica

Test conditions

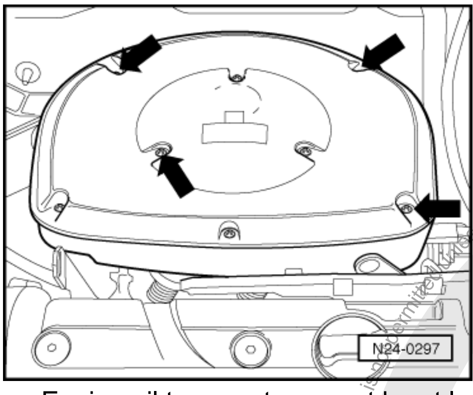

- Engine oil temperature must be at least 30 °C.

Work sequence

- -> Remove air cleaner. To do this remove bolts marked with an arrow.

Note:

If the securing screws are loosened or tightened with a power tool the thread in the intake pipe can be damaged. Therefore the use of a power tool is only permissible when:

- The power tool speed is max. 200 rpm
- The tightening torque is set to max. 3 Nm

- Remove spark plugs.
- Pull connector off Hall sender (distributor).
- Use a second mechanic to fully depress accelerator pedal.
- Check compressions with compression tester V.A.G 1381 or V.A.G 1763.

Note:

See relevant test unit operating instructions for instructions on how to use test unit.

- Operate starter until test unit indicates no further pressure increase.

Compression pressure:

New: 10...15 bar
Wear limit: 7 bar

Permissible difference between all cylinders: 3 bar

Protected by copyright. Copying for private or commercial purposes, in part or in whole, is not permitted unless authorised by Volkswagen AG. Volkswagen AG does not guarantee or accept any liability with respect to the correctness of information in this document. Copyright by Volkswagen AG.

satelettronica

2 - Servicing valve gear

2.1 - Servicing valve gear

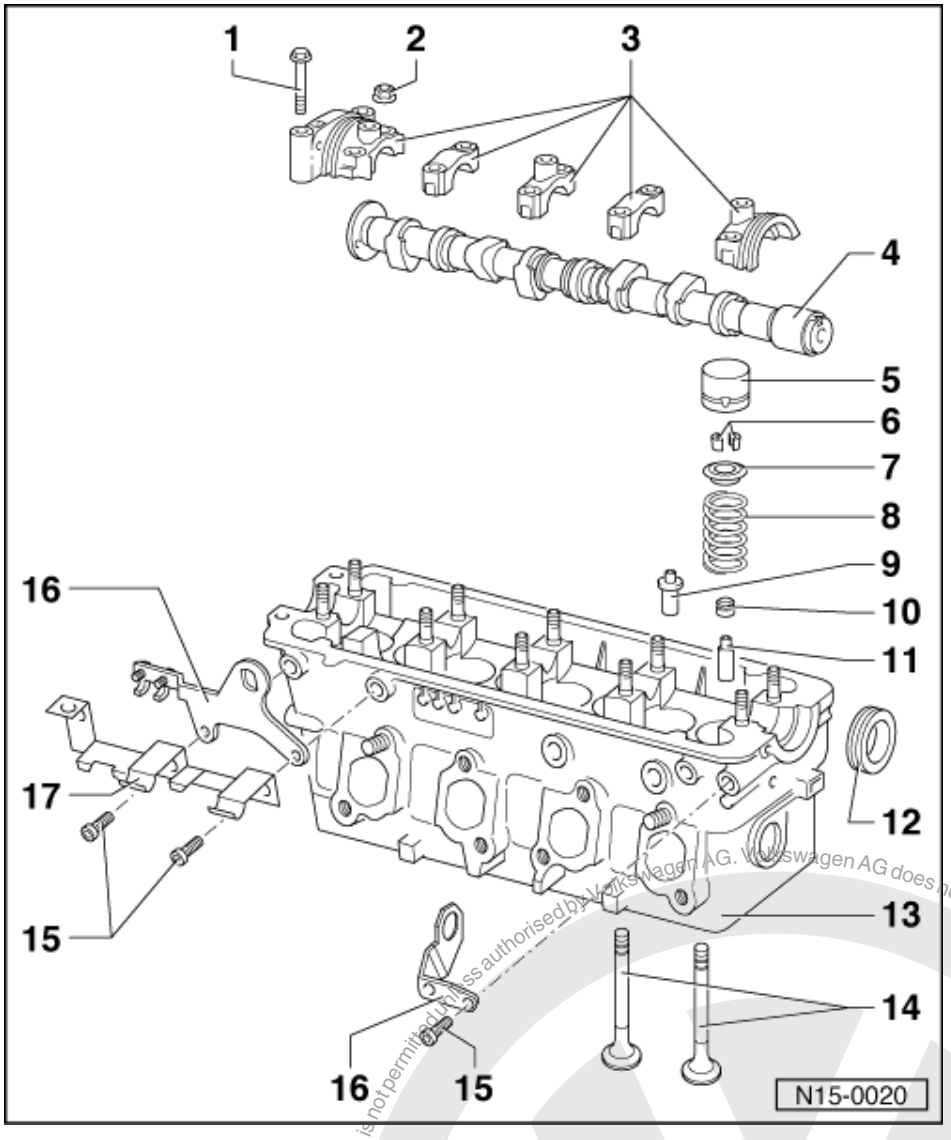

Note:

Cylinder heads which have cracks between the valve seats or between valve seat inserts and the spark plug thread can be used further without reducing service life, provided the cracks do not exceed a maximum of 0.5 mm in width, or when no more than the first turns of the spark plug thread are cracked.

1 10 Nm
2 6 Nm + 1/4 turn (90 °) further
3 Bearing cap
- Installation sequence
  => Page 51 , removing and installing camshaft
- Coat bearing cap 1 and 5 seating areas lightly with sealant AMV 174 004 01

satelettronica
Protected by copyright. Copying for private or commercial purposes, in part or in whole, is not permitted unless authorised by Volkswagen AG. Volkswagen AG does not guarantee or accept any liability with respect to the correctness of information in this document. Copyright by Volkswagen AG.

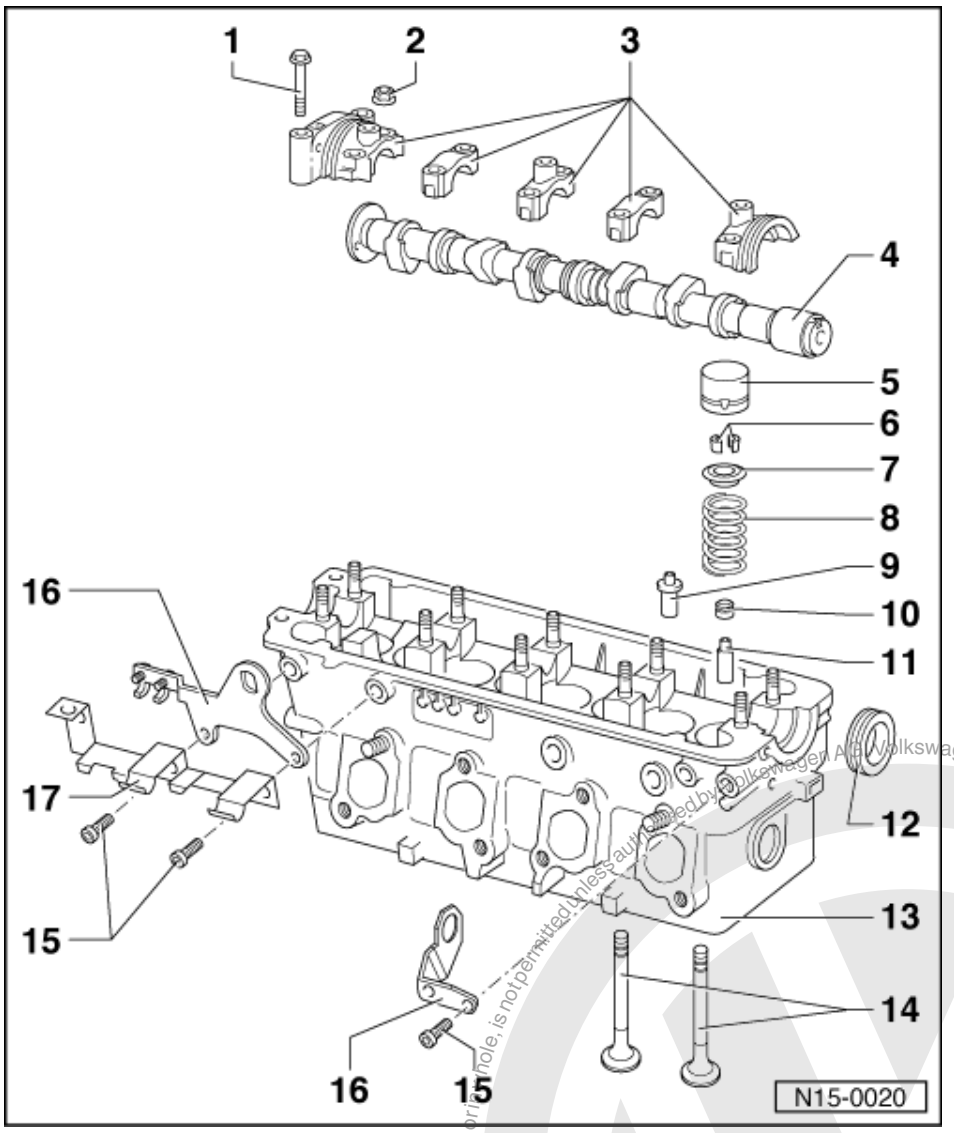

4 Camshaft
- Checking axial clearance => Fig. 2
- Removing and installing => Page 51
- Checking radial clearance with plastigage
  Wear limit: 0.1 mm
- Run-out: max. 0.01 mm
- Identification and valve timing => Page 47 , Fig. 3

5 Bucket tappet
- Do not interchange
- With hydraulic valve clearance compensation
- Checking => Page 50
- Store with cam lobe contact surface downwards
- Before installing check camshaft axial clearance => Fig. 2
- Oil contact surface

6 Cotters

Protected by copyright. Copying for private or commercial purposes, in part or in whole, is not permitted unless authorised by Volkswagen AG. Volkswagen AG does not guarantee or accept any liability with respect to the correctness of information in this document. Copyright by Volkswagen AG.
satelettronica

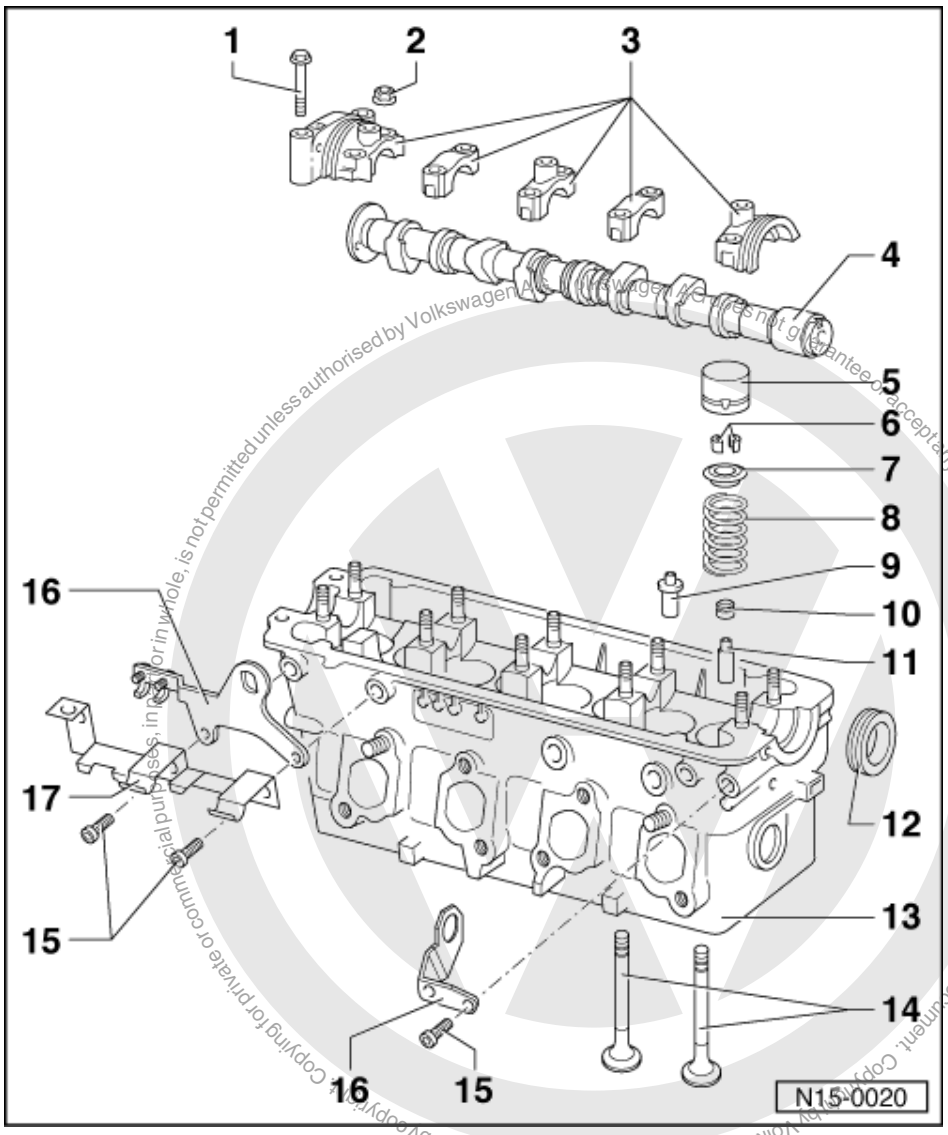

7 Upper valve spring plate

8 Valve spring

- Removing and installing:
  Cylinder head
  removed: with 2037
  installed: => Page 53 , renewing valve stem seals

9 Service part - valve guide

- With collar

10 Valve stem seal

- Renewing=> Page 53

11 Valve guide

- Checking => Page 52
- Renewing => Page 53

12 Oil seal

- Lightly oil sealing lip of oil seal
- Renewing=> Page 49

satelettronica

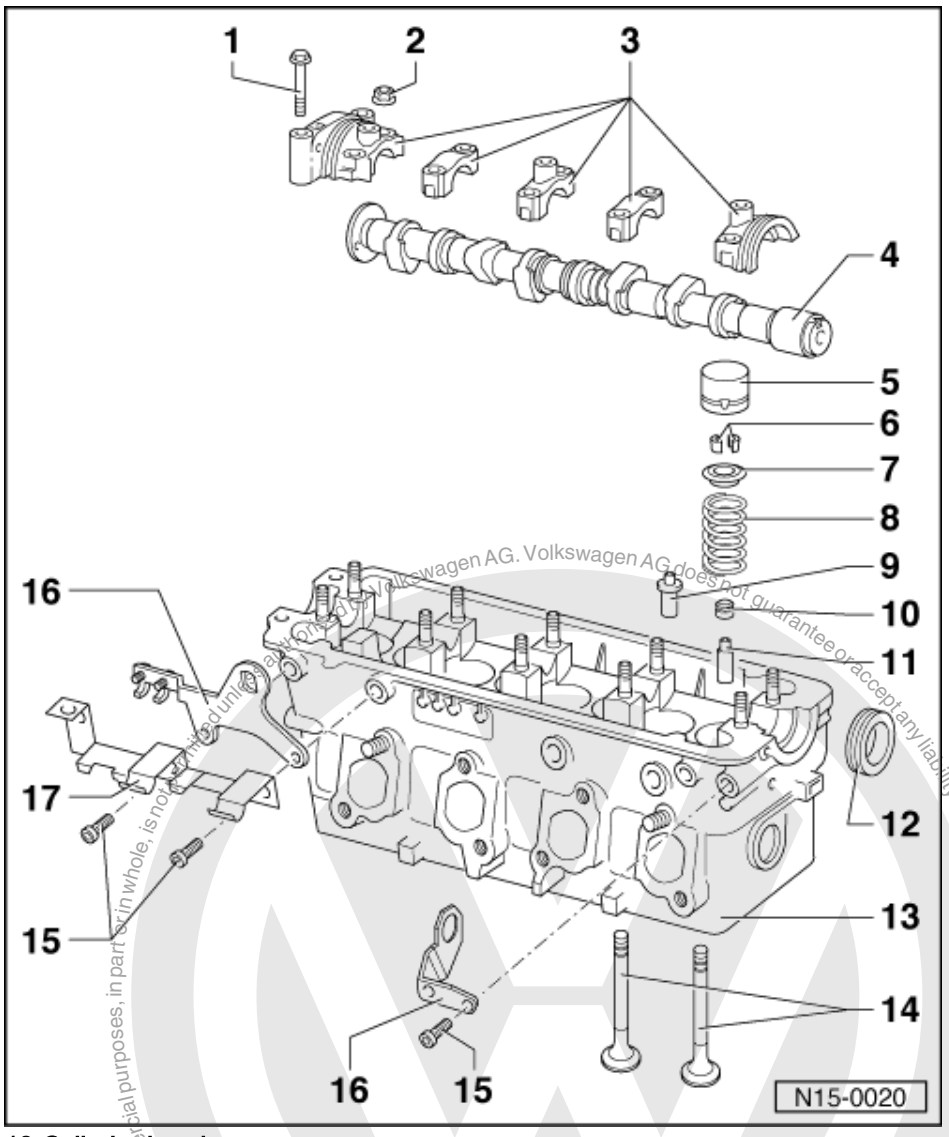

13 Cylinder head
- Reworking valve seats
  => Page 47
- Reworking sealing surface
  => Fig. 1

14 Valves
- Do not rework only grinding-in is permitted
- Valve dimensions => Fig. 4

15 20 Nm

16 Lifting eye

17 Bracket
- For H.T. cable guide

Protected by copyright. Copying for private or commercial purposes, in part or in whole, is not permitted unless authorised by Volkswagen AG. Volkswagen AG does not guarantee or accept any liability with respect to the correctness of information in this document. Copyright by Volkswagen AG.
satelettronica

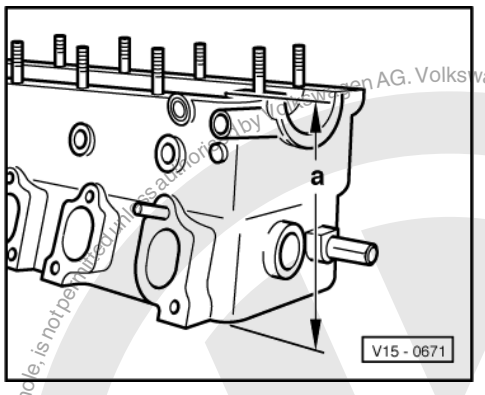

-> Fig. 1 Reworking cylinder head sealing surface

Cylinder head reworking dimension:
a = At least 135.6 mm

Note:

When the sealing surface has been reworked, the valves must be set deeper by the same amount (rework valve seat inserts), otherwise valves will contact pistons. Ensure when doing this that the permissible minimum dimension is maintained => Page 47 .

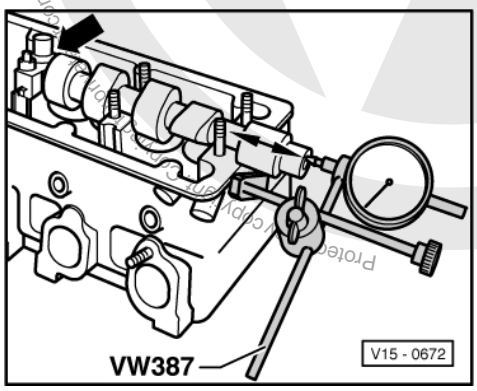

-> Fig. 2 Checking camshaft axial clearance

Special tools, testers, measuring instruments and auxiliary items required

- Universal dial gauge bracket VW 387
- Dial gauge

Check with bucket tappets removed and No. 3 bearing cap fitted.

Wear limit: max. 0.15 mm

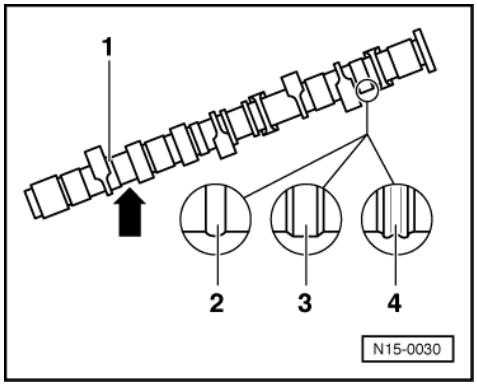

Protected by copyright. Copyright by Volkswagen AG. Volkswagen AG does not guarantee or accept any liability with respect to the correctness of information in this document. Copyright by Volkswagen AG. Protected by copyright. Copying for private or commercial purposes, in part or in whole, is not permitted unless authorised by Volkswagen AG.
satelettronica

-> Fig.3 Camshaft identification, valve timing

Protected by copyright. Copying for private or commercial purposes, in part or in whole, is not permitted unless authorised by Volkswagen AG. Volkswagen AG does not guarantee or accept any liability with respect to the correctness of information in this document. Copyright by Volkswagen AG.

Identification

Engine code	AEE ALM	AEX APQ ANX	AKV
Between inlet and exhaust cams cylinder 1 -arrow-	032 S	030AM	030AM
Ring identification	1	1 and 2	1 and 2

Valve timing at 1 mm valve lift

Engine code	AEE ALM	AEX APQ ANX	AKV
Inlet opens after TDC	7°	10°	10°
Inlet closes after BDC	32°	27°	27°
Exhaust opens before BDC	32°	27°	27°
Exhaust closes before TDC	9°	10°	10°

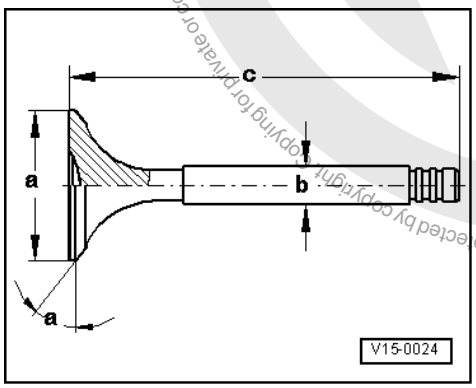

-> Fig. 4 Valve dimensions

Note:

Valves must not be reworked. Only lapping-in is permitted.

Dimension		Inlet valve	Exhaust valve
øa	mm	35.6	29.0
øb	mm	6.963	6.943
c	mm	94.8	95.0
α	<°	45	45

2.2 - Reworking valve seats

Special tools, testers, measuring instruments and auxiliary items required

- Depth gauge
- Valve seat refacing tool

satelettronica

Notes:

- When repairing engines with leaking valves, it is not sufficient to replace or renew valve seats and valves. It is also necessary to check the valve guides for wear. This particularly important on high mileage engines => Page 52 .
- The valve seats should only be reworked just enough to produce a perfect seating pattern. The maximum permissible reworking dimension must be calculated before work is carried out. If the reworking dimension is exceeded, the function of the hydraulic tappets can no longer be guaranteed and therefore the cylinder head should be renewed.

Protected by copyright. Copying for private or commercial purposes, in part or in whole, is not permitted unless authorised by Volkswagen AG. Volkswagen AG does not guarantee or accept any liability with respect to the correctness of information in this document. Copyright by Volkswagen AG.

The max. permissible reworking dimension is calculated as follows:

- Insert valve and press firmly against seat.

Note:

If the valve is to be renewed as part of a repair, use a new valve for the calculation.

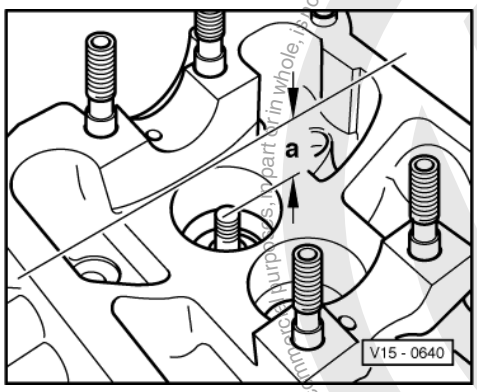

- -> Measure distance -a- between end of valve stem and upper edge of cylinder head.
- Calculate max. permissible reworking dimension from measured distance and minimum dimension.

Minimum dimension:
Inlet valve 35.8 mm
Exhaust valve 36.1 mm

Measured distance minus minimum dimension
= max. permissible reworking dimension.

Example:

-	Measured distance	36.5	mm
	Minimum dimension	35.8	mm
=	max. perm. rework dimension*	0.7	mm

*) The max. permissible reworking dimension is shown on illustrations for reworking valve seats as dimension "b".

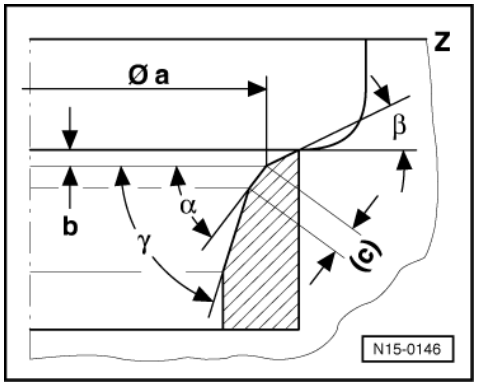

satelettronica

-> Reworking inlet valve seat

a	= 34.4 mm ø
b	= Max. permissible reworking dimension*
c	= Max. 2.0 mm
Z	= Cylinder head lower edge
α	= 45 °valve seat angle
β	= 30 °upper correction angle
γ	= 60 °lower correction angle

Note:

Valve seat rings having restrictor may only be reworked so far that the restrictor is not damaged.

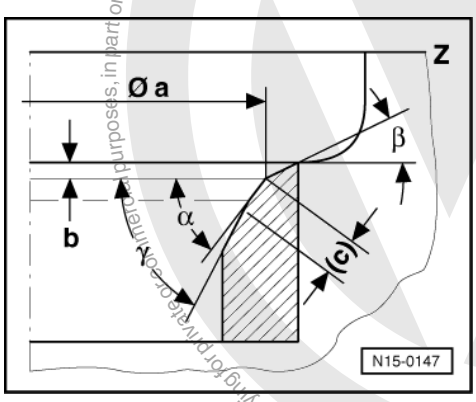

-> Reworking exhaust valve seat

a	= ø27.8 mm
b	= Max. permissible reworking dimension*
c	= max. 2.0 mm
Z	= Cylinder head lower edge
α	= 45 °valve seat angle
β	= 30 °upper correction angle
γ	= 60 °lower correction angle

*) Calculating max. permissible reworking dimension => Page 48 .

2.3 - Removing and installing camshaft oil seal

Special tools, testers, measuring instruments and auxiliary items required

- Counter-hold tool 3036
- Oil seal extractor 2085
- Guide sleeve from puller 3083
- Oil seal fitting tool 10-203
- V.A.G 1332 Torque wrench (40...200 Nm)

Removing

- Remove ribbed belt => Page 17 .
- Remove vibration damper and toothed belt guard upper and lower parts.
- Loosen camshaft sprocket (counter-hold with 3036).
- Release tensioner and take off toothed belt.
- Pull off camshaft sprocket.
- Unbolt rear toothed belt guard from cylinder head.
- Remove upper coolant pump bolt and pull rear toothed belt guard forwards.

Protected by copyright. Copying for private or commercial purposes, in part or in whole, is not permitted unless authorised by Volkswagen AG. Volkswagen AG does not guarantee or accept any liability with respect to the correctness of information in this document. Copyright by Volkswagen AG.
satelettronica

- Unscrew inner part of oil seal extractor 2085 two turns (approx. 3 mm) out of the outer part and lock in position with knurled screw.

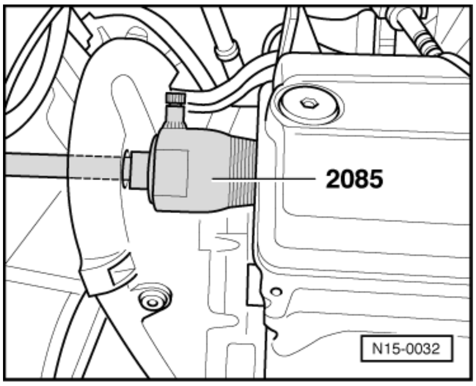

- -> Lubricate threaded head of oil seal extractor, place it in position and exerting firm pressure screw it as far as possible into oil seal.
- Loosen knurled screw and turn inner part of extractor against camshaft until oil seal has been extracted.

Installing

- Lightly oil sealing lip of oil seal.
- Start oil seal with guide sleeve from 3083.
- Remove guide sleeve.

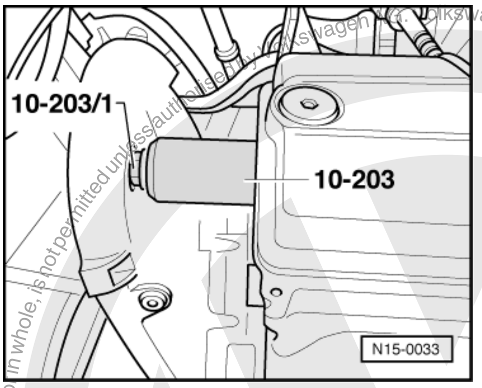

- -> Press oil seal in onto stop with press sleeve from 10-203 and bolt 10-203/1. Place two washers between press sleeve and hexagon head bolt.

The rest of the assembly is basically a reverse of the dismantling sequence.

Installing toothed belt and adjusting timing => Page 18 .

2.4 - Checking hydraulic bucket tappets

Special tools, testers, measuring instruments and auxiliary items required

- Feeler gauge
- Wood or plastic wedge

Notes:

- Renew defective tappet complete (cannot be adjusted or repaired).
- Irregular valve noises when starting engine are normal.

Test sequence

- Start engine and run until the radiator fan has switched on once.

Protected by copyright. Copying for private or commercial purposes, in part or in whole, is not permitted unless authorised by Volkswagen AG. Volkswagen AG does not guarantee or accept any liability with respect to the correctness of information in this document. Copyright by Volkswagen AG.
sateletronica

- Increase engine speed to about 2500 rpm for approx. 2 minutes.

If the hydraulic tappets are still noisy, locate defective tappets as follows:

- Remove cylinder head cover.
- Rotate crankshaft clockwise, until cam of the tappet to be checked is pointing upwards.
- Determine play between cam and bucket tappet.

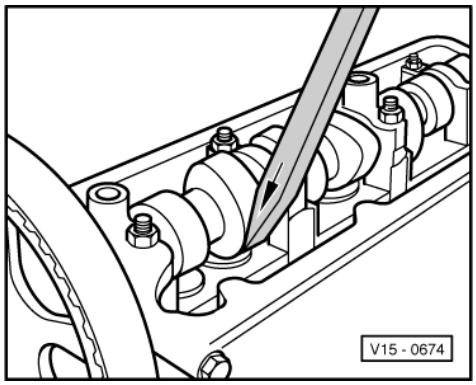

- -> Push bucket tappet down lightly with a wooden or plastic wedge. If when the bucket tappet is pushed down a 0.2 mm thick feeler gauge can be pushed between the camshaft and bucket tappet, the bucket tappet is to be replaced.

Note:

After installing new tappets the engine must not be started for approx. 30 minutes. Hydraulic compensation elements must settle (otherwise valves will strike pistons).

2.5 - Removing and installing camshaft

Special tools, testers, measuring instruments and auxiliary items required

- Counter-hold tool 3036
- V.A.G 1331 Torque wrench (5...50 Nm)
- V.A.G 1332 Torque wrench (40...200 Nm)
- Sealing compound AMV 174 004 01

Removing

- Remove ribbed belt => Page 17
- Remove vibration damper and toothed belt guard upper and lower parts.
- Loosen camshaft sprocket (counter-hold with 3036).
- Release tensioner and take off toothed belt.
- Pull off camshaft sprocket.
- Unbolt rear toothed belt guard from cylinder head.

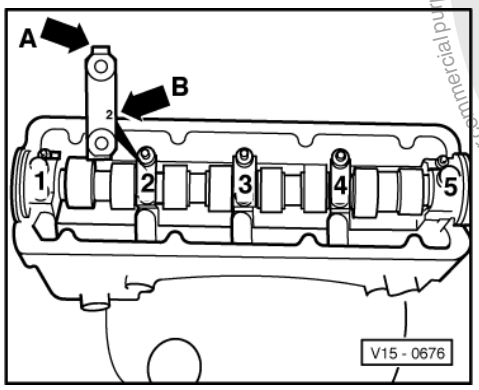

Protected by copyright. Copying for private or commercial purposes, in part or whole, is not permitted unless authorised by Volkswagen AG. Volkswagen AG does not guarantee or accept any liability with respect to the correctness of information in this document. Copyright by Volkswagen AG.
satelettronica

- Remove cylinder head cover.
- Remove distributor.
- -> First remove bearing caps 5, 1 and 3.
- Slacken off bearing caps 2 and 4 alternately and diagonally.

Installing

- The pistons must not be positioned at TDC.

Note:

Note fitting position of bearing cap: Wider cast lug -arrow A- to intake side and the bearing cap number -arrow B- readable from the exhaust side.

- Oil the camshaft contact surfaces.
- Fit camshaft.
- Tighten bearing caps 2 and 4 alternately and diagonally to
  6 Nm.
- Coat bearing cap 1 and 5 contact surfaces lightly with sealant AMV 174 004 01.
- Install bearing caps 3, 1 and 5 and tighten to
  6 Nm.
  When doing this insert distributor for centralizing bearing cap 5.
- Turn all nuts by 1/4 turn (90 °) further.
- Insert bolts for bearing cap 5 and tighten to
  10 Nm.

The rest of the assembly is basically a reverse of the dismantling sequence.

Installing toothed belt and adjusting timing => Page 18.

Note:

When new tappets have been installed the engine must not be started for about 30 minutes. Hydraulic compensation elements must settle (otherwise valves will strike pistons).

2.6 - Checking valve guides

Special tools, testers, measuring instruments and auxiliary items required

- VW 387 Universal dial gauge bracket
- Dial gauge

Test sequence

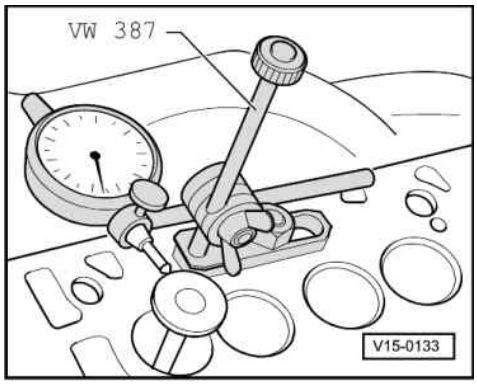

- -> Insert new valve into guide until end of valve stem is flush with end of guide. Due to the slight difference in stem dimensions, ensure that only an inlet valve is used in the inlet guide and an exhaust valve in the exhaust guide.
- Determine rock.
  Wear limit:

Protected by copyright. Copyright by Volkswagen AG. Volkswagen AG does not permit access authorised by Volkswagen AG. Volkswagen AG does not guarantee or accept any liability with respect to the correctness of information in this document. Copyright by Volkswagen AG.
satelettronica

Inlet valve guide = 1.0 mm
Exhaust valve guide = 1.3 mm

2.7 - Renewing valve guides

Special tools, testers, measuring instruments and auxiliary items required

- Drift 3121
- Hand reamer 3120 and cutting fluid

Removing

- First check whether the valve seat insert rings and if necessary the cylinder head sealing surface can be reworked. If this is not the case then the valve guide should not be replaced.
- Press out worn valve guides with 3121 from the camshaft side (valve guides with shoulder - repair version - from the combustion chamber side).

Installing

- Coat new guides with oil and press in with 3121 from the camshaft side (cylinder head cold) until shoulder makes contact.

Note:

When the shoulder on guide makes contact, the pressure must not exceed 10 kN (approx. 1.0 t) otherwise shoulder may break off.

- Ream guides out with hand reamer 3120 using plenty of cutting fluid.
- Rework valve seats => Page 47 .

2.8 - Renewing valve stem seals

(with cylinder head fitted)

Special tools, testers, measuring instruments and auxiliary items required

- Puller 3047A
- Assembly tool 2036
- Pressure hose VW 653/3
- Lever VW 541/1A with press piece VW 541/5
- Fitting tool 3129
- V.A.G 1331 Torque wrench (5...50 Nm)

Removing

- Remove camshaft => Page 51 .
- Remove bucket tappets (do not interchange) and store with the contact surface downwards.
- Remove spark plugs.
- Set piston of appropriate cylinder to "bottom dead centre".

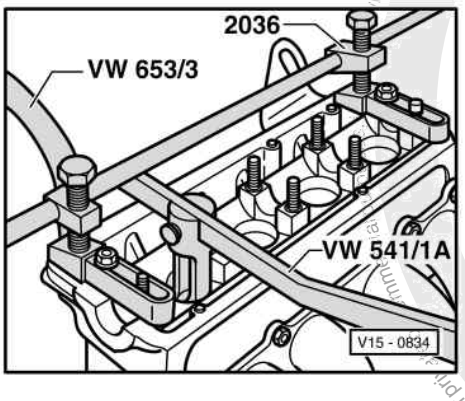

satelettronica
Protected by copyright. Copying for private or commercial purposes, in part or in whole, is not permitted unless authorised by Volkswagen AG. Volkswagen AG does not guarantee or accept any liability with respect to the correctness of information in this document. Copyright by Volkswagen AG.

- -> Fit assembly tool 2063 and adjust to height of studs.
- Screw pressure hose VW 653/3 into the spark plug thread.
- Connect pressure hose to a compressed air system of at least 6 bar.
- Remove valve springs with lever VW 541/1A and press piece VW 541/5.

Note:

Tight cotters can be loosened by tapping lightly on the lever.

- Pull off valve stem seals with 3047A.

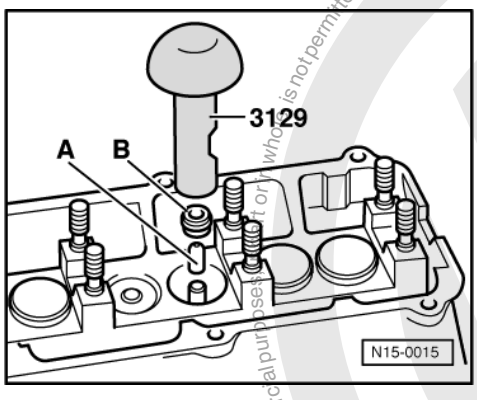

Installing

- -> Place the plastic sleeve supplied on the appropriate valve stem. This will prevent the new valve stem seal being damaged.
- Insert new valve stem seal in fitting tool 3129.
- Oil valve stem seal sealing lip and press carefully onto the valve guide.

Protected by copyright. Copyright by Volkswagen AG.
Copyright by Volkswagen AG. Volkswagen AG does not guarantee or accept any liability with respect to the correctness of information in this document. Copyright by Volkswagen AG.
Protected by copyright. Copying for private or commercial purposes, in part or in whole, is not permitted unless authorised by Volkswagen AG.
satelettronica

17 - Lubrication

1 - Removing and installing parts of the lubrication system

1.1 - Removing and installing parts of the lubrication system

Note:
The oil level must not be above the max. mark - danger of damaging catalyst!
Marks => Page 61 , Fig. 4 .
Checking oil pressure => Page 70
Oil system capacity1):
without oil filter 3.0 ltrs.
with oil filter 3.4 ltrs.
1) Up-to-date figures:
=> Exhaust emissions test binder
Engine oil specifications:
Use engine oil to VW standard 500 00 or 501 01. Only in exceptional cases: Multi-grade oils corresponding to API-SF or SG.

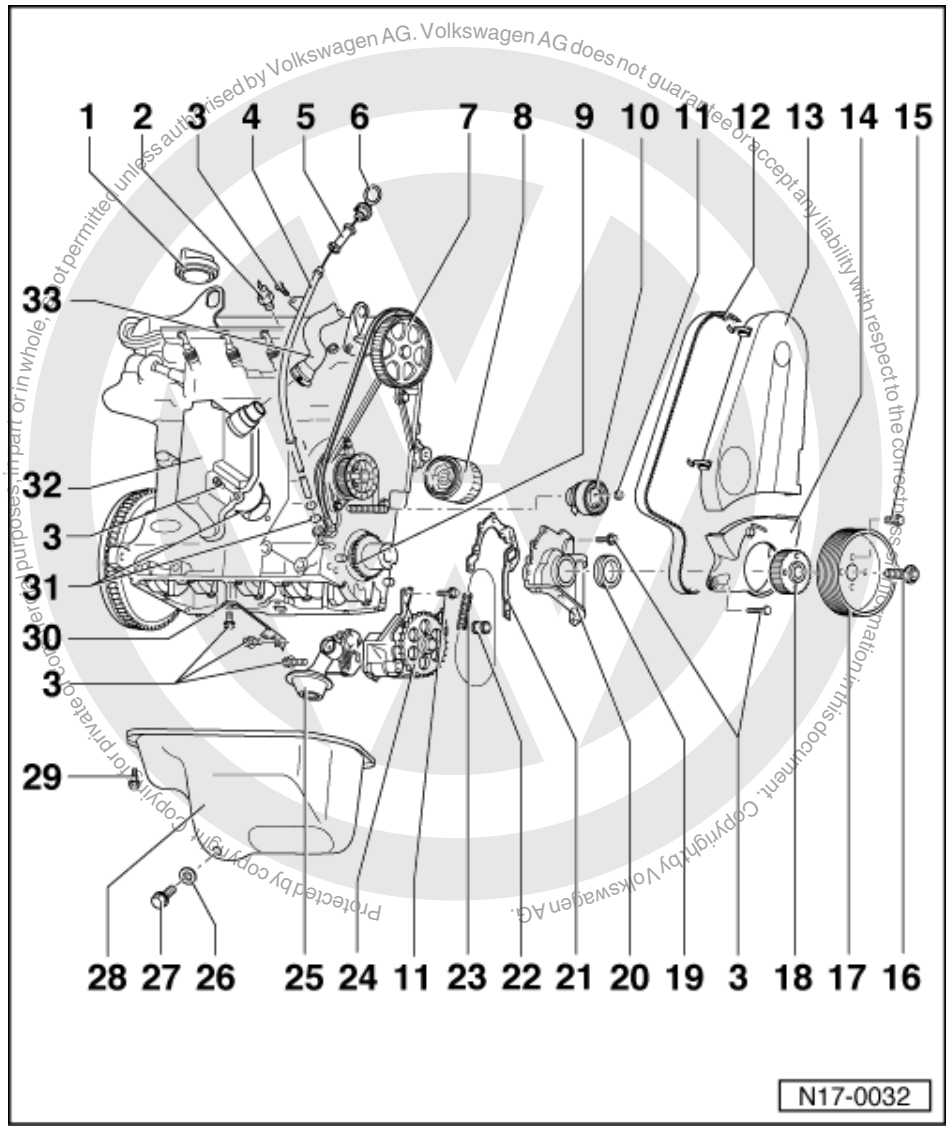

satelettronica

1 Cap
- Renew seal if damaged

2 0.25 bar oil pressure switch (F22), 25 Nm
- Identification: blue
- Checking => Page 70
- If sealing ring is leaking nip open and replace.

3 10 Nm

4 Guide tube

5 Guide
- Pull off to extract oil

6 Dipstick
- The oil level must not be above the max. mark!
- Marking => Fig. 4

Protected by copyright. Copying for private or commercial purposes, in part or in whole, is not permitted unless authorised by Volkswagen AG. Volkswagen AG does not guarantee or accept any liability with respect to the correctness of information in this document. Copyright by Volkswagen AG.

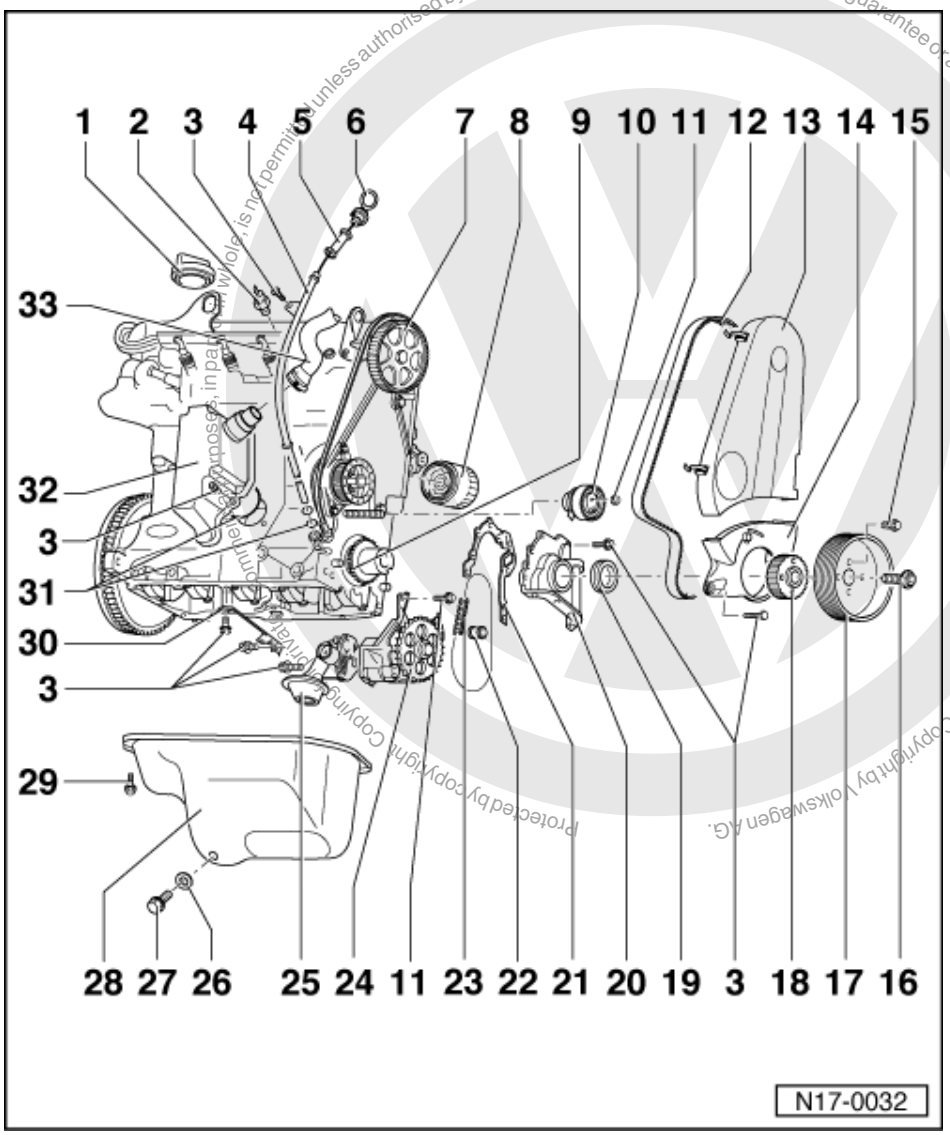

7 Camshaft sprocket
- Note position when installing toothed belt => Page 18

8 Oil filter
- Loosen with strap wrench
- Tighten by hand
- Observe installation instructions on oil filter

9 Chain sprocket

10 Tensioner

satelettronica

- Tensioning toothed belts
  => Page 18

11 20 Nm

12 Toothed belt

- Mark D.O.R. before removing
- Check for wear
- Do not kink
- Removing, installing and tensioning
  => Page 18

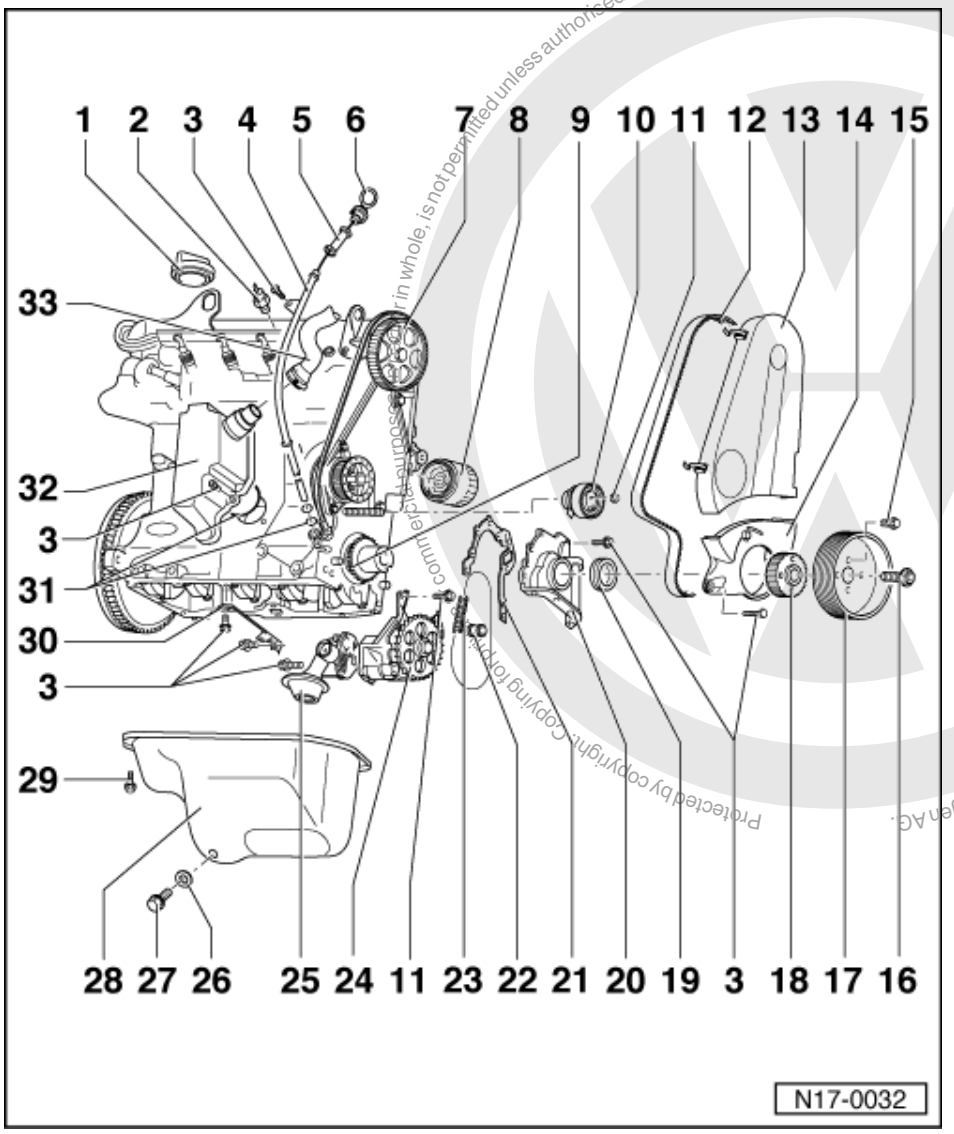

13 Toothed belt guard - upper part

14 Toothed belt guard - lower part

15 20 Nm

16 Hexagon bolt: 90 Nm + 1/3 turn
(120 °) further
Multi-point screw: 90 Nm + 1/4 turn (90 °) further

- Renew
- Oil threads
- The turning further can be done in several stages
- The turning further angle can be measured with a commercial protractor e.g. Hazet 6690

17 Belt pulley

- When installing note fixing arrangement

18 Crankshaft toothed belt sprocket

Protected by copyright. Copying for private or commercial purposes, in whole or in part, is not permitted unless authorised by Volkswagen AG. Volkswagen AG does not guarantee or accept any liability with respect to the correctness of information in this document. Copyright by Volkswagen AG.
satelettronica

19 Oil seal
- Renewing => Page 24

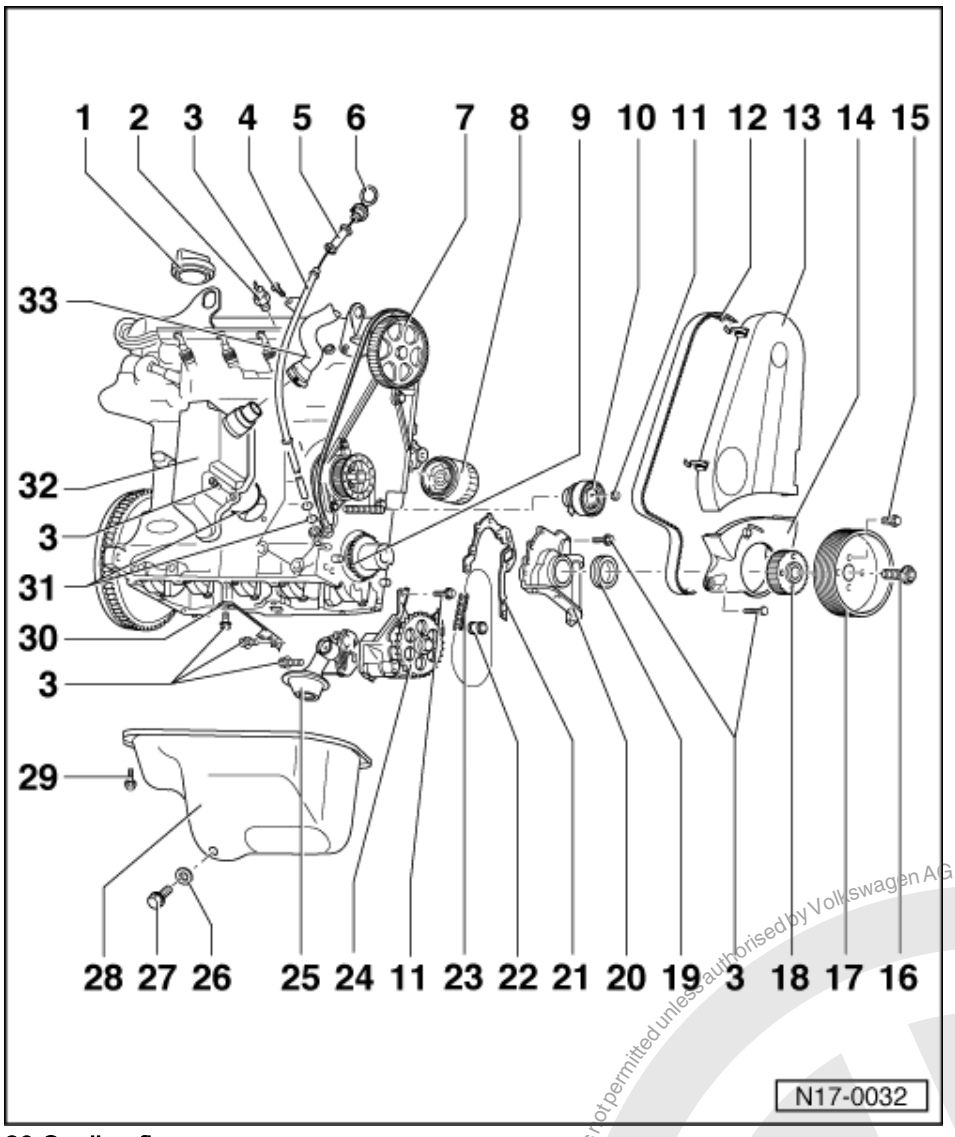

20 Sealing flange

21 Gasket
- Renew

22 Sealing bush
- Renew if damaged
- Insert in sealing flange first
- Coat with oil when installing

23 Chain
- Tensioning => Fig. 3

24 Oil pump
- Checking backlash => Fig. 1
- Checking axial clearance => Fig. 2

25 Oil pump cover with pressure relief valve
- Opening pressure: 4.0...5.0 bar
- Clean strainer if soiled

Protected by copyright. Copying for private or commercial purposes, in part or in whole, is not permitted unless authorised by Volkswagen AG. Volkswagen AG does not guarantee or accept any liability with respect to the correctness of information in this document. Copyright by Volkswagen AG.
satelettronica

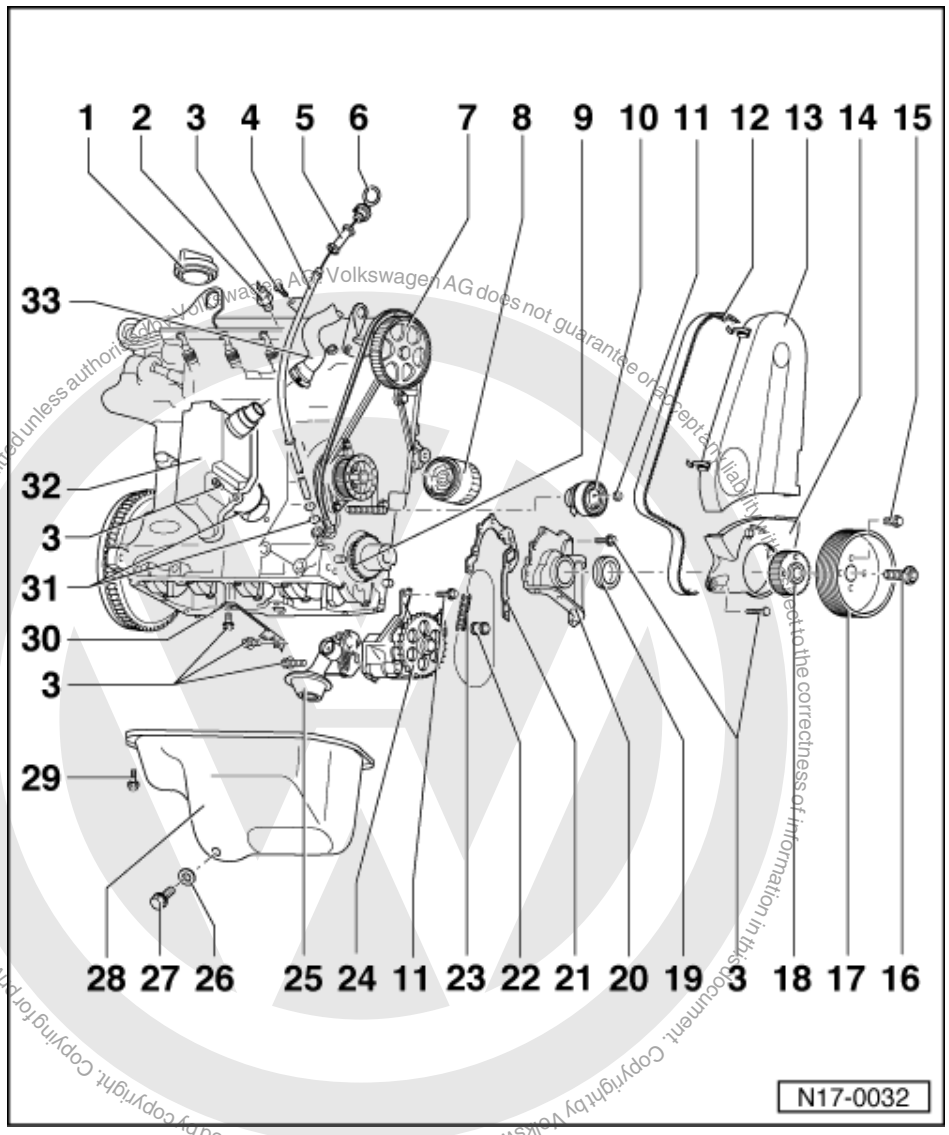

26 Seal
- Renew

27 Oil drain plug
- Metal sump: 30 Nm
- Aluminium sump: 20 Nm

28 Sump
- Removing and installing
  => Page 66

29 15 Nm
- Loosen and tighten the flywheel end bolts only with socket insert 3249

30 Bracket

31 O-ring
- Renew

32 Oil separator

33 To air cleaner

Protected by copyright. Copying for private or commercial purposes, in part or in whole, is not permitted unless authorised by Volkswagen AG. Volkswagen AG does not guarantee or accept any liability with respect to the correctness of information in this document. Copyright by Volkswagen AG.

satelettronica

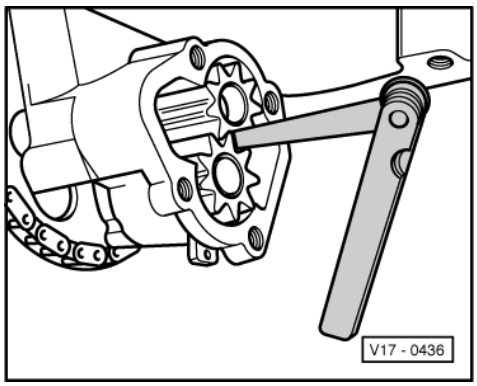

-> Fig. 1 Checking oil pump backlash

New: 0.05 mm

Wear limit: 0.20 mm

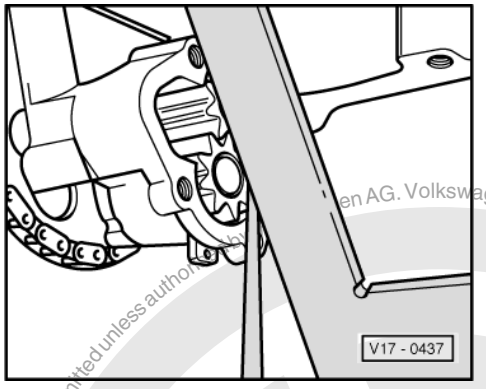

-> Fig. 2 Checking oil pump axial clearance

Wear limit: 0.15 mm

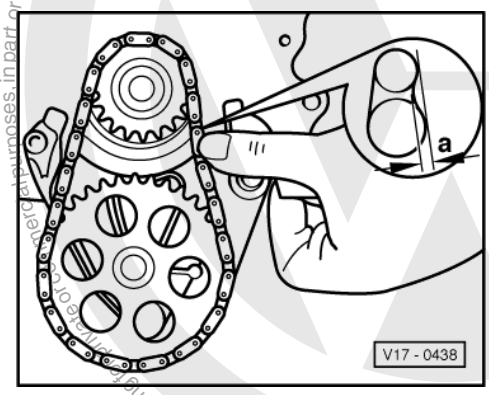

-> Fig. 3 Tensioning drive chain

Tension chain by moving oil pump. Check tension with light thumb pressure.
Checking: a = 4.0...5.0 mm
Setting: a = 3.5...4.5 mm

Protected by copyright. Copyright by Volkswagen AG. Volkswagen AG does not guarantee or accept any liability with respect to the correctness of information in this document. Copying for private or commercial purposes, in part or in whole, is not permitted unless authorised by Volkswagen AG.
satelettronica

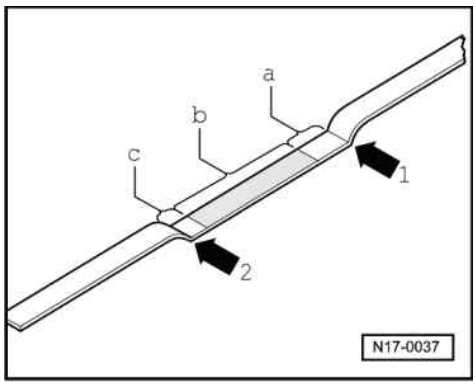

-> Fig. 4 Marking on oil dipstick

1 - max. mark
2 - min. mark
a - Area above hatched field up to max. mark: Do not replenish with engine oil!
b - Oil level within hatched field: can be replenished with engine oil
c - Area from min. mark up to hatched field: replenish with max. 0.5 ltr. of engine oil!

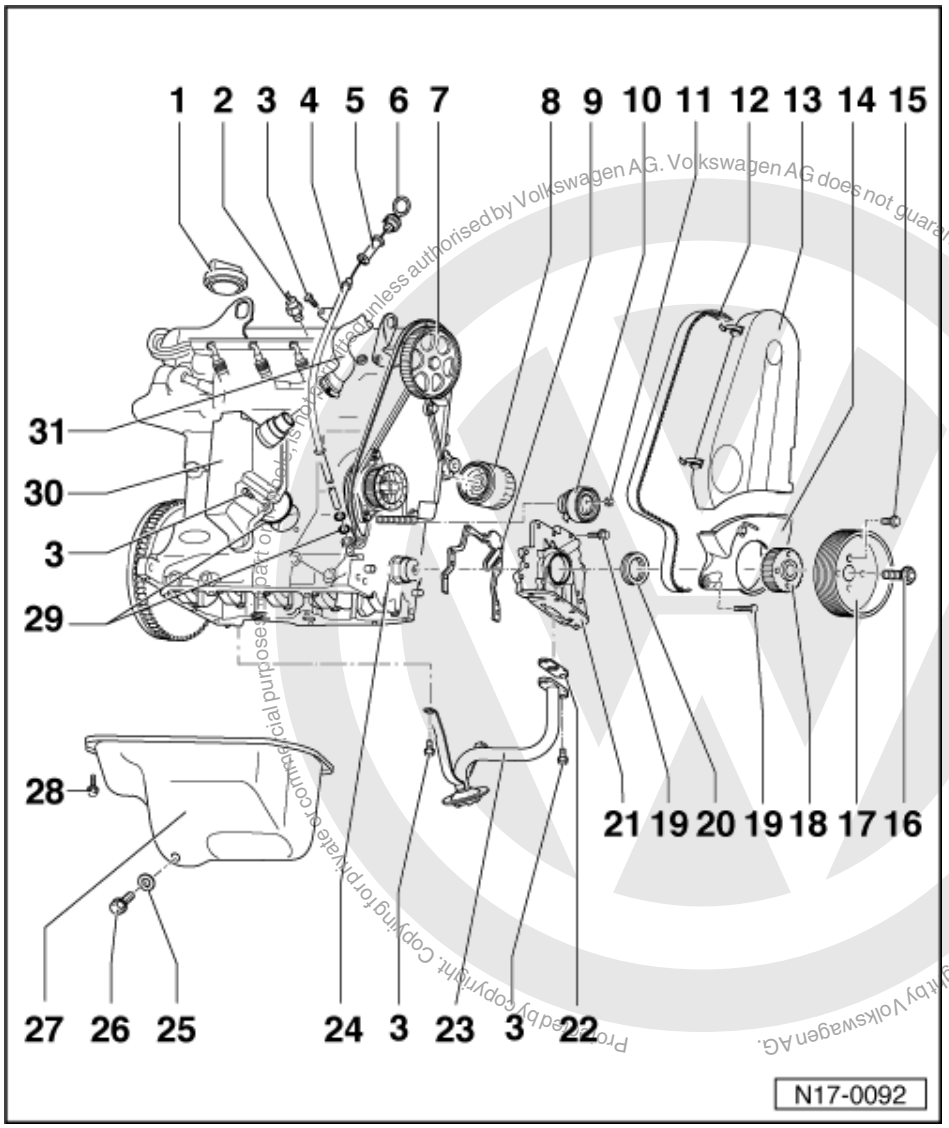

satelettronica

Vehicles with Duo-centric oil pump

1 Cap
- Renew seal if damaged

2 1.4 bar oil pressure switch (F1), 25 Nm
- Black
- Checking => Page 70

3 10 Nm

4 Guide tube

5 Guide
- Pull off to extract oil

6 Dipstick
- The oil level must not be above the max. mark!
- Marking => Page 61 , Fig. 4

7 Camshaft sprocket
- Note position when installing toothed belt
  => Page 18

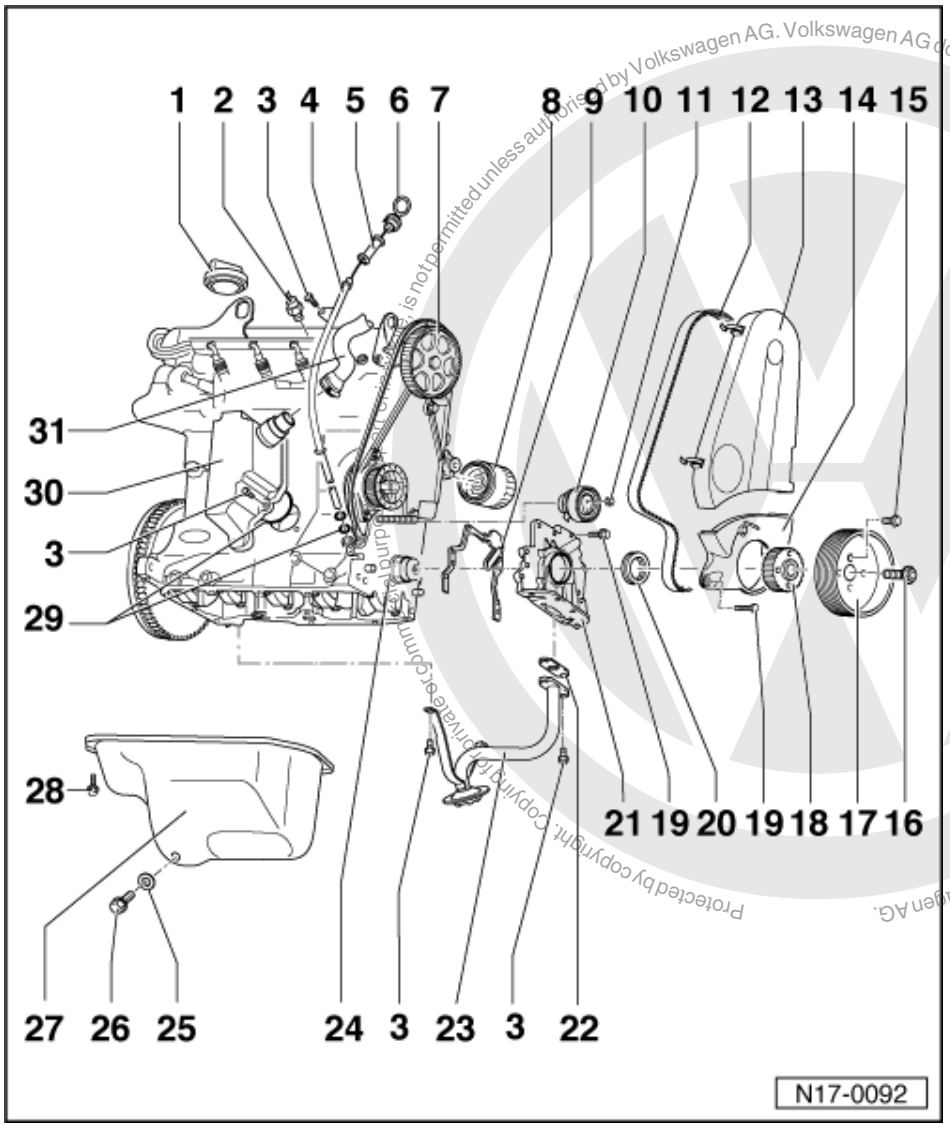

8 Oil filter
- Loosen with strap wrench
- Tighten by hand
- Observe installation instructions on oil filter

9 Gasket

Protected by copyright. Copyright by Volkswagen AG.
Copyright by Volkswagen AG. Volkswagen AG does not guarantee or accept any liability with respect to the correctness of information in this document. Copyright by Volkswagen AG.
satelettronica

Protected by copyright. Copying for private or commercial purposes, in part or in whole, is not permitted unless authorised by Volkswagen AG. Volkswagen AG does not guarantee or accept any liability with respect to the correctness of information in this document. Copyright by Volkswagen AG.

- Renew
- Must be located on dowel sleeves

10 Tensioner
- Tensioning toothed belts
  => Page 18

11 20 Nm

12 Toothed belt
- Mark D.O.R. before removing
- Check for wear
- Do not kink
- Removing, installing and tensioning
  => Page 18

13 Toothed belt guard - upper part

14 Toothed belt guard - lower part

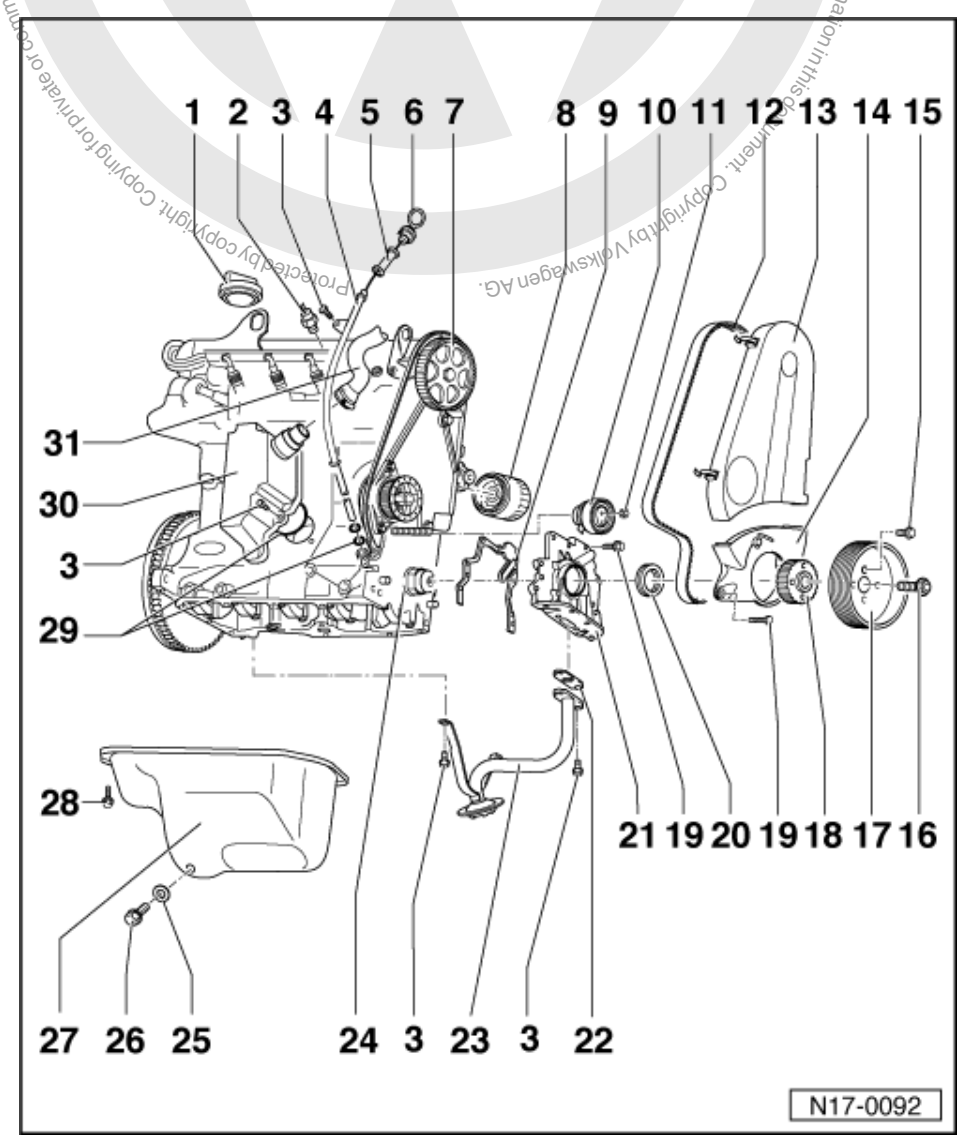

15 20 Nm

16 90 Nm + 1/4 turn (90 °) further
- Renew
- Oil threads
- The turning further can be done in several stages
- The turning further angle can be measured with a commercial protractor e.g. Hazet 6690

17 Belt pulley
- When installing note fixing arrangement

satelettronica

18 Crankshaft toothed belt sprocket
- Note position when installing toothed belt
  => Page 18

19 8 Nm

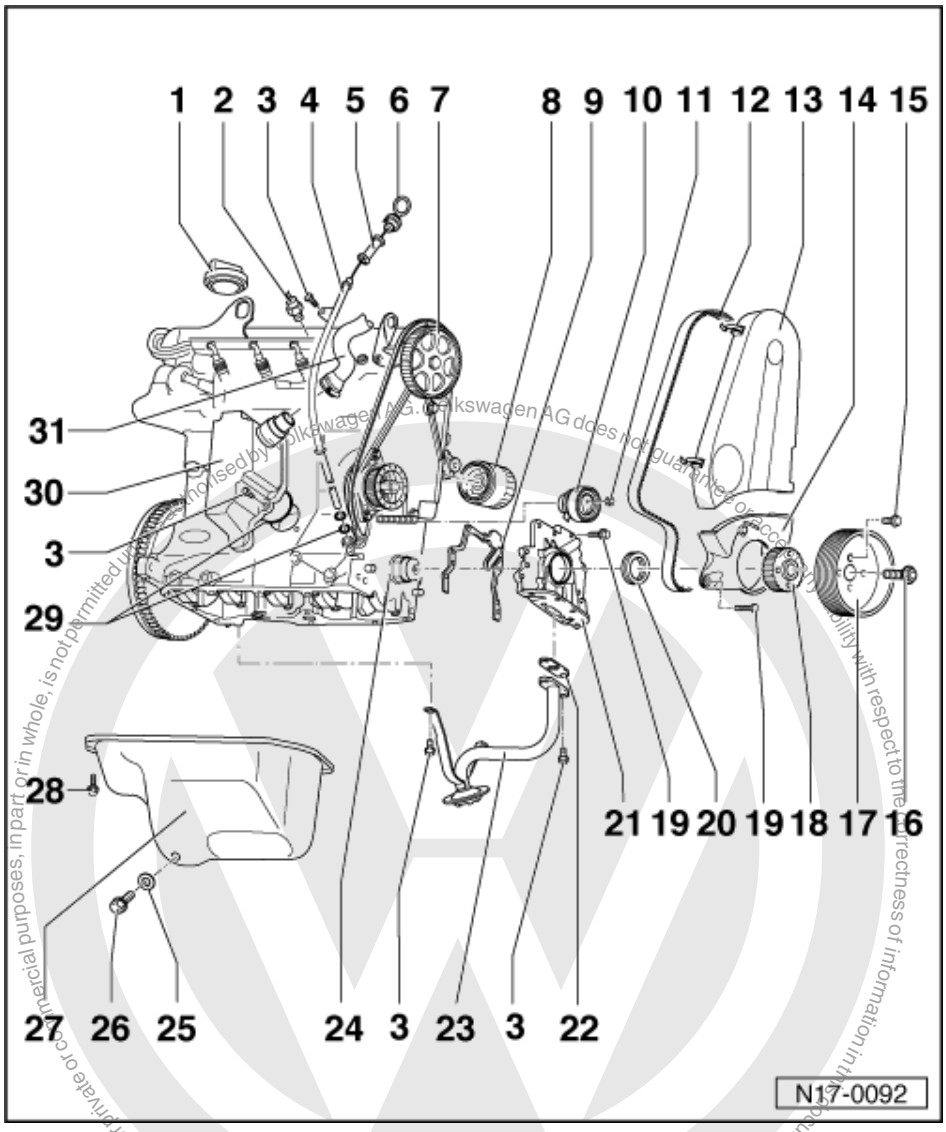

20 Oil seal
- Renewing => Page 24

21 Oil pump
- Only renew complete
- When installing note follower on crankshaft
  => Page 64 , item 24
- Must be located on dowel sleeves
- Removing and installing
  => Page 68

22 Gasket

23 Suction pipe
- Clean strainer if soiled

24 Driver
- Coat with oil before installing oil pump

25 Seal

satelettronica

- Renew

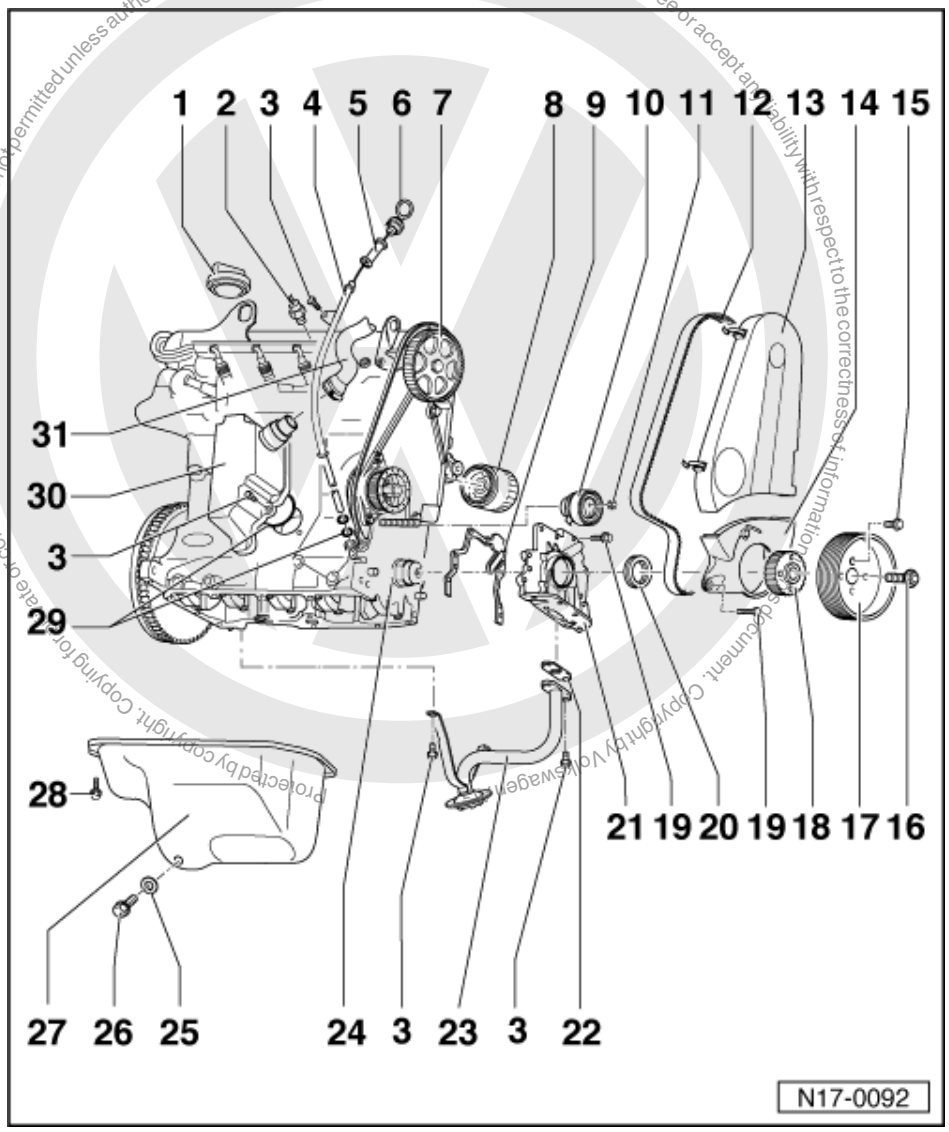

26 Oil drain plug
- Metal sump: 30 Nm
- Aluminium sump: 20 Nm

27 Sump
- Removing and installing engines with liquid gasket
  => Page 66
- Clean sealing surface before installing
- Install with silicone sealant
  D 176 404 A2
  => Page 66

28 15 Nm
- On aluminium block: Renew bolts (coated with sealant)

29 O-ring
- Renew

30 Oil separator

31 To air cleaner

satelettronica

1.2 - Removing and installing oil sump

Special tools, workshop equipment, testers, measuring instruments and auxiliary items required

- Socket 3249
- Hand drill with plastic brush
- Flat scraper
- Silicone sealant D176404 A2
- V.A.G 1331 Torque wrench (5...50 Nm)

Work sequence

- Drain engine oil.
- Remove ribbed belt guard.
- Unbolt right-hand drive shaft at gearbox.

=> Running gear; Repair group 40; Servicing front suspension; Removing and installing wheel bearing, suspension strut and drive shaft Servicing front suspension Removing and installing wheel bearing, suspension strut and drive shaft

- Remove cover plate for flywheel.
- Unbolt sump sealed with liquid gasket.
- Remove sump, it may be necessary to release sump by tapping lightly with a rubber head hammer.
- Remove sealant residue on cylinder block with a flat scraper.

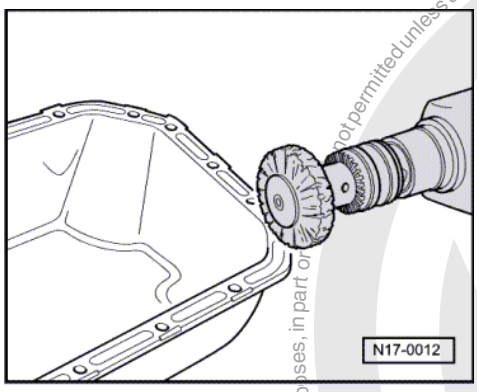

- -> Remove sealant residue on the sump with a rotating brush, e.g. a hand drill with a plastic brush (wear eye protection).
- Clean sealing surface, must be free of oil and grease.

Notes:

- Note the use by date of the sealant.
- Sump must be installed within 5 minutes of applying silicone sealing compound.

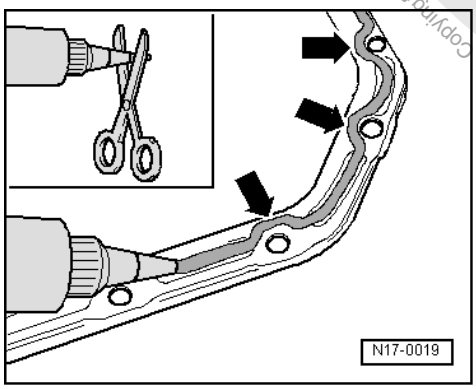

- Sump can be offered up easier and with greater security if, for guide purposes, M6 studs are inserted into the cylinder block flange at two positions.

Protected by copyright. Copying for private or commercial purposes, in part or in whole, is not permitted unless authorised by Volkswagen AG. Volkswagen AG does not guarantee or accept any liability with respect to the correctness of information in this document. Copyright by Volkswagen AG.
satelettronica

- -> Cut off tube nozzle at forward marking (nozzle approx. 3 mm ø).
- Apply silicone sealing compound, as shown, to clean sump sealing surface. Sealing compound bead must be.
  - 3...4 mm thick
  - and run on inside of bolt holes -arrows-.

Note:

The sealing compound bead must not be thicker, otherwise excessive sealing compound will enter the sump and may block the oil suction pipe strainer.

- Install sump immediately and tighten all sump bolts lightly.
- Tighten sump bolts to
  15 Nm.

Note:

After installing sump the sealant must be allowed to dry for approx. 30 minutes before engine oil is replenished.

1.3 - Removing and installing Duo-centric oil pump

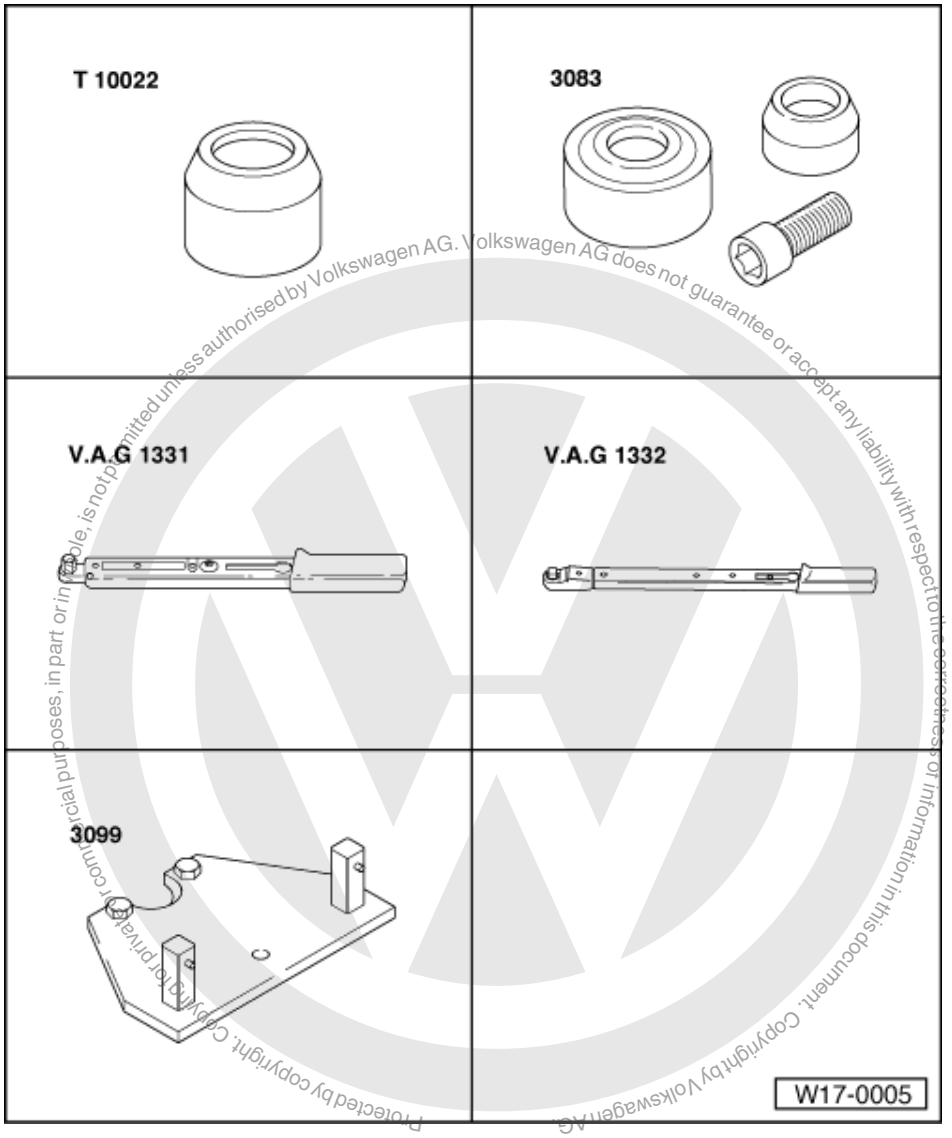

satelettronica

Special tools, workshop equipment, test and measuring appliances and auxiliary items required

- T10022 Sleeve
- 3083 Oil seal fitting tool
- V.A.G 1331 Torque wrench (5...50 Nm)
- V.A.G 1332 Torque wrench (40...200 Nm)
- 3099 Counter-hold tool

Removing

- Remove toothed belt => Page 18 , Removing, installing and tensioning toothed belt.
- Position crankshaft at TDC No. 1 cylinder:

  The chamfered tooth of toothed belt sprocket must align with the marking (2V) on the oil pump.

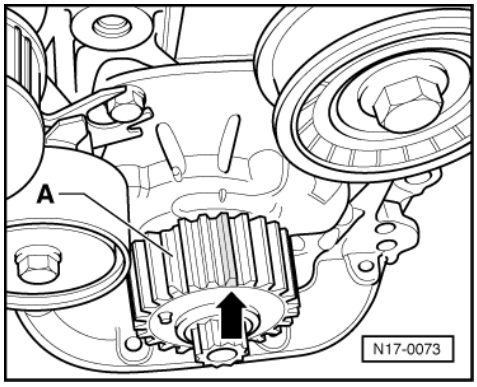

- -> Turn crankshaft/toothed belt sprocket three teeth anti-clockwise away from TDC:

  The third tooth -arrow- to the right of the tooth ground down -A- on the toothed belt sprocket must align with TDC mark on the oil pump housing.

- Loosen securing bolt from crankshaft toothed belt sprocket. To do this secure toothed belt sprocket using counter-hold tool 3099.

Note:

This procedure moves the crankshaft to the correct installation position for the oil pump. One of the polygon cams on the crankshaft is uppermost.

- Remove crankshaft toothed belt sprocket and tensioning roller. To do this secure toothed belt sprocket using counter-hold tool 3099.
- Remove sump => Page 66 .
- Remove suction pipe => Page 64 , item 23 .
- Remove oil pump.
- Remove gasket.
- Remove sealant remnants on cylinder block with a flat scraper.
- Clean sealing surfaces, they must be oil and grease free.

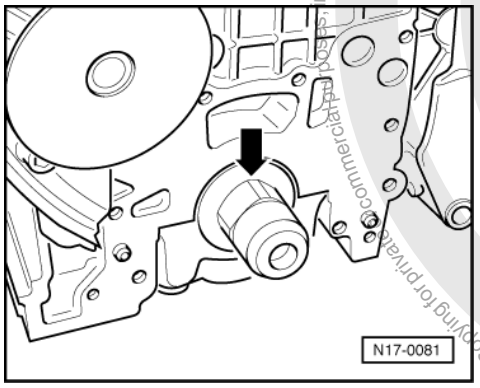

Protected by copyright. Copying for private or commercial purposes, in part or in whole, is not permitted unless authorised by Volkswagen AG. Volkswagen AG does not guarantee or accept any liability with respect to the correctness of information in this document. Copyright by Volkswagen AG.
satelettronica

Volkswagen AG. Volkswagen AG does not guarantee or accept any liability with respect to the correctness of information in this document. Copyright by Volkswagen AG. Protected by copyright. Copying for private or commercial purposes, in part or in whole, is not permitted unless authorised by Volkswagen AG.

Installing

Conditions

- -> One of the polygon cams -arrow- on the crankshaft is uppermost.

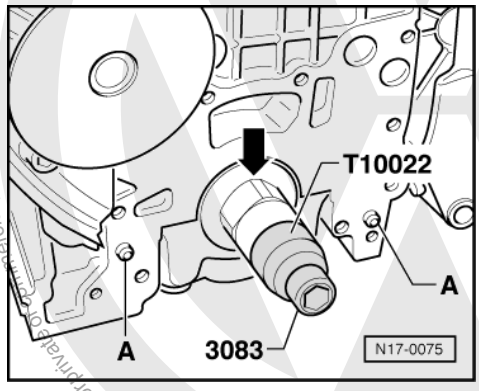

Work sequence

- -> Fit sleeve T10022 and hexagon socket head bolt from 3083 onto crankshaft and tighten hand tight.
- Fit new gasket onto guide pins -A-.

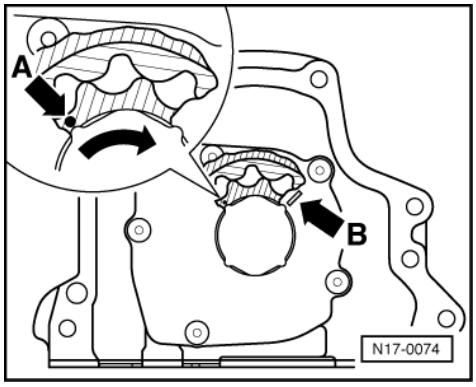

- -> Position one of the oil pump inner rotor markings arrow -A- on installation position mark arrow -B- on oil pump housing cover.
- Coat the four crankshaft polygon cams with oil.
- Lightly oil sealing lip of oil pump oil seal.
- Guide oil pump carefully onto crankshaft polygon cams.
- Align inner rotor to crankshaft polygon cams by turning slightly if necessary.
- Then slide oil pump carefully onto guide pins.
- Install oil pump, Page 62 , item 21 .
- Remove sleeve T10022.
- Install suction pipe => Page 64 , item 23 .
- Install oil sump => Page 66 .
- Install toothed belt sprocket and tensioning roller, install and tension toothed belt => Page 18 , Removing, installing and tensioning toothed belt.

satelettronica

1.4 - Checking oil pressure and oil pressure switch

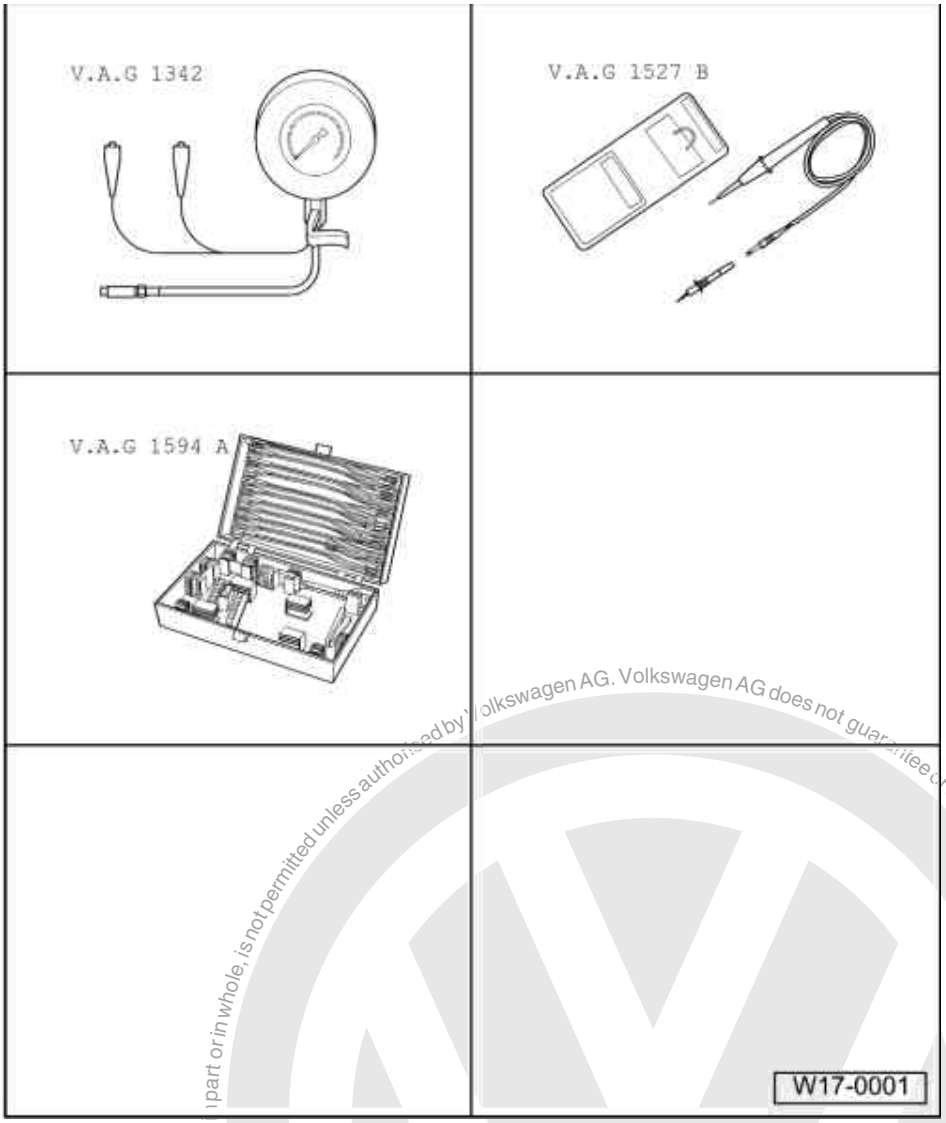

Special tools, workshop equipment, test and measuring appliances and auxiliary items required

- V.A.G 1342 Oil pressure tester
- V.A.G 1527 B Diode test lamp
- V.A.G 1594 A Adapter set

Vehicles ‣ 08.97

Test sequence

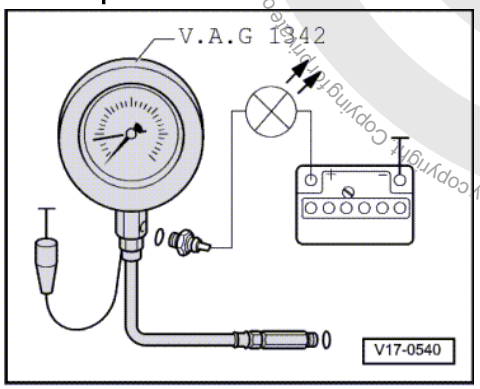

Protected by copyright. Copying for private or commercial purposes, in part or in whole, is not permitted unless authorised by Volkswagen AG. Volkswagen AG does not guarantee or accept any liability with respect to the correctness of information in this document. Copyright by Volkswagen AG.
satelettronica

- -> Remove oil pressure switch (F22) and screw into tester.
- Screw tester into the cylinder head in place of the oil pressure switch.
- Connect brown wire of tester to earth (-).
- Connect diode test lamp V.A.G 1527 using aux. cables from V.A.G 1594 to battery positive (+) and oil pressure switch. LED must light up.
- Start engine and increase speed slowly.
  At
  0.15...0.35 bar
  the LED must go out, otherwise renew oil pressure switch.
- Increase engine speed further.
  At 2000 rpm and an oil temperature of 80 °C the oil pressure should be at least 2.0 bar.

Vehicles 09.97 ▸

Note:

Functional check and servicing the optical and acoustic oil pressure warning:

=> Current flow diagrams, Electrical fault finding and Fitting locations

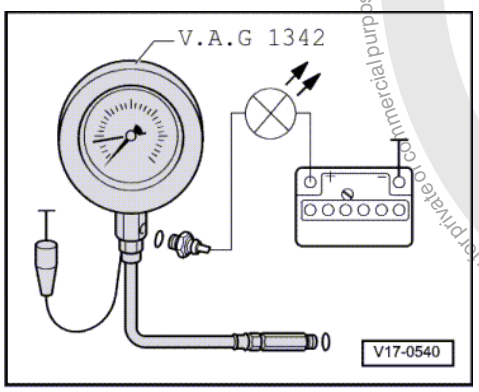

- -> Remove 1.4 bar oil pressure switch (F1) (black insulation) and screw into test unit.
- Screw tester into the cylinder head in place of the oil pressure switch.
- Connect brown wire of tester to earth (-).
- Connect diode test lamp V.A.G 1527 B using aux. cables from V.A.G 1594 A to battery positive (+) and oil pressure switch. LED must not light up.
- If the LED lights up, renew 1.4 bar oil pressure switch (F1) .

If the LED does not light up:

- Start engine and run at idling speed
  at
  1.2...1.6 bar
  the LED must light up, otherwise renew 1.4 bar oil pressure switch (F1).
- Increase engine speed further.
  At 2000 rpm and an oil temperature of 80 °C the oil pressure should be at least 2.0 bar.

Protected by copyright. Copying for private or commercial purposes, in part or in whole, is not permitted unless authorised by Volkswagen AG. Volkswagen AG does not guarantee or accept any liability with respect to the correctness of information in this document. Copyright by Volkswagen AG.
satelettronica

19 - Cooling system

1 - Removing and installing parts of cooling system

1.1 - Removing and installing parts of cooling system

Notes:

- When the engine is warm the cooling system is under pressure. If necessary release pressure before commencing repair work.
- Hoses are secured with spring-type clips. In cases of repair only use spring-type clips.
- V.A.G 1921 pliers are recommended when installing spring-type clips.

Draining and filling with coolant=> Page 80

Coolant mixture ratios => Page 80 , draining and filling with coolant

Carry out cooling system leakage check with V.A.G 1274 and 1274/3.

Protected by copyright. Copying for private or commercial purposes, in part or in whole, is not permitted unless authorised by Volkswagen AG. Volkswagen AG does not guarantee or accept any liability with respect to the correctness of information in this document. Copyright by Volkswagen AG.

satelettronica

1.2 - Parts of cooling system body side

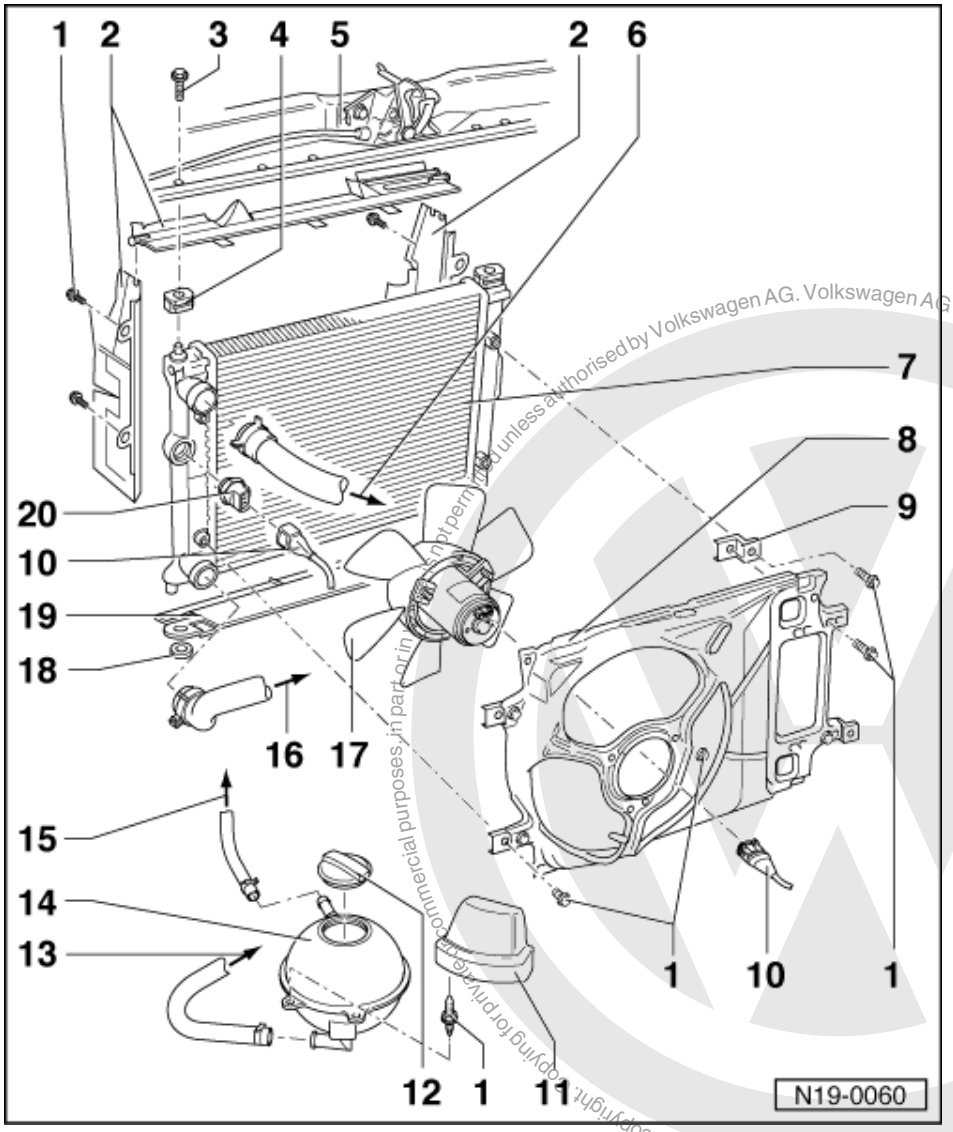

1 10 Nm
2 Front air ducting
3 10 Nm
4 Clamping piece
5 Lock carrier
6 Upper coolant hose
- To thermostat housing =>Page 78 , Item 19

7 Radiator
- Removing and installing =>Page 82
- After replacing renew entire coolant

8 Fan ring
9 Distance piece

Protected by copyright. Copying for private or commercial purposes, in part or in whole, is not permitted unless authorised by Volkswagen AG. Volkswagen AG does not guarantee or accept any liability with respect to the correctness of information in this document. Copyright by Volkswagen AG.
satelettronica

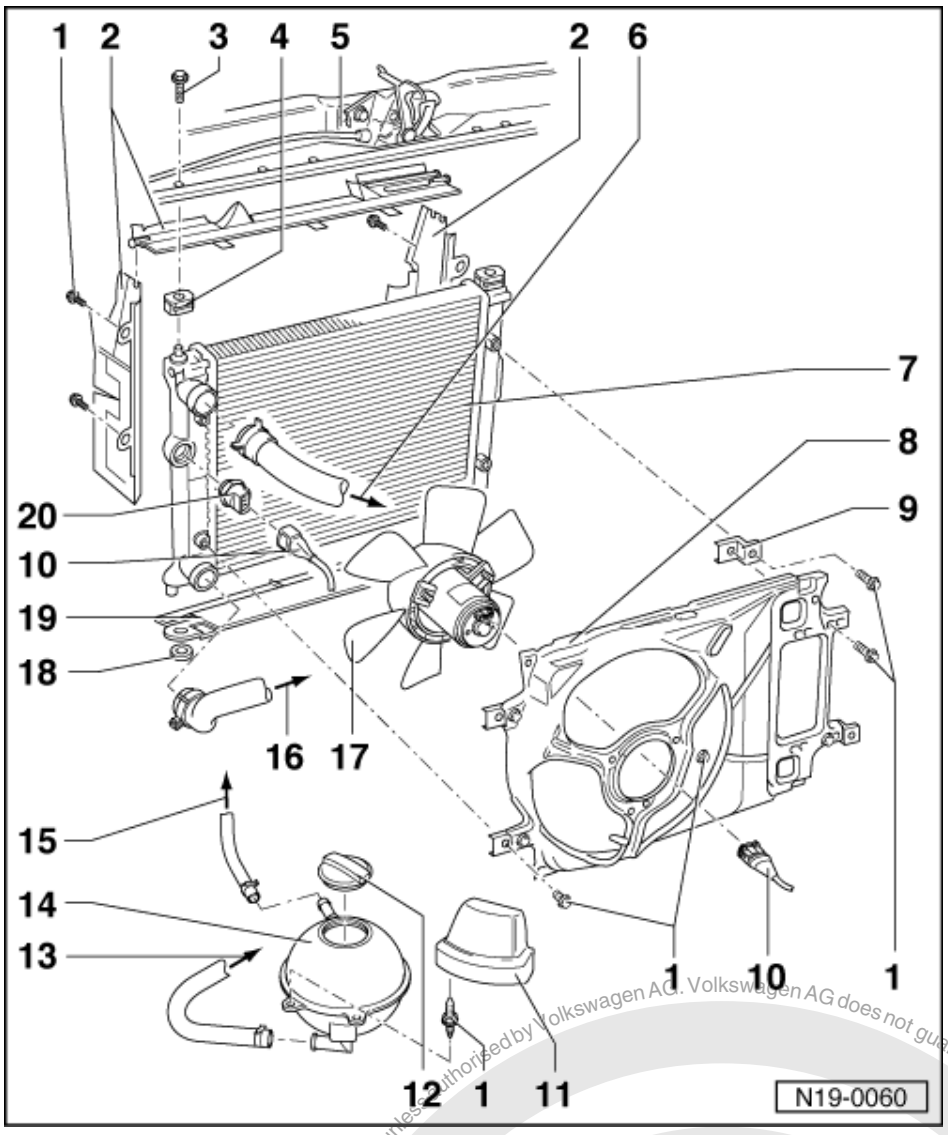

10 Connector
11 Cover
12 Cap
- Check with V.A.G 1274 and 1274/4
- Test pressure 1.4...1.6 bar

13 To thermostat housing
- =>Page 77 , Item 9

14 Expansion tank
15 To thermostat housing
- =>Page 77 , Item 7

16 Lower coolant hose
- To connection
  =>Page 76 , Item 3

17 Radiator fan
- Double fan on vehicles with air conditioning system (drive for 2nd fan via V-belt)

Protected by copyright. Copying for private or commercial purposes, in part or in whole, is not permitted unless authorised by Volkswagen AG. Volkswagen AG does not guarantee or accept any liability with respect to the correctness of information in this document. Copyright by Volkswagen AG.
satelettronica

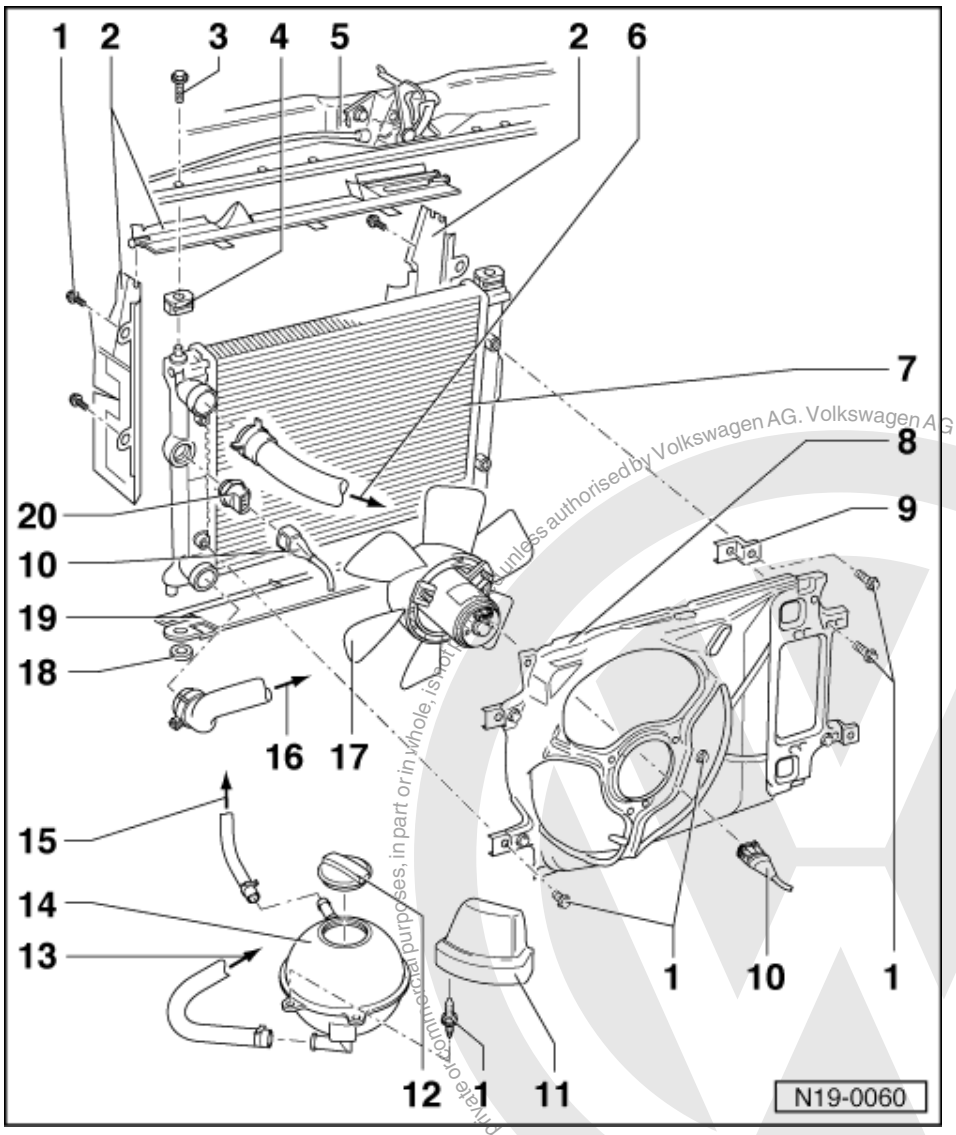

18 Rubber washer
19 Lower air ducting
20 Thermo-switch (F18), 35 Nm
- For electric fan
- Switching temperatures:
  Stage 1
  on: 92...97 °C
  off: 84...91 °C
  Stage 2
  on: 99...105 °C
  off: 91...98 °C

Protected by copyright. Copying for private or commercial purposes, in part or in whole, is not permitted unless authorised by Volkswagen AG. Volkswagen AG does not guarantee or accept any liability with respect to the correctness of information in this document. Copyright by Volkswagen AG.
satelettronica

1.3 - Parts of cooling system - engine side

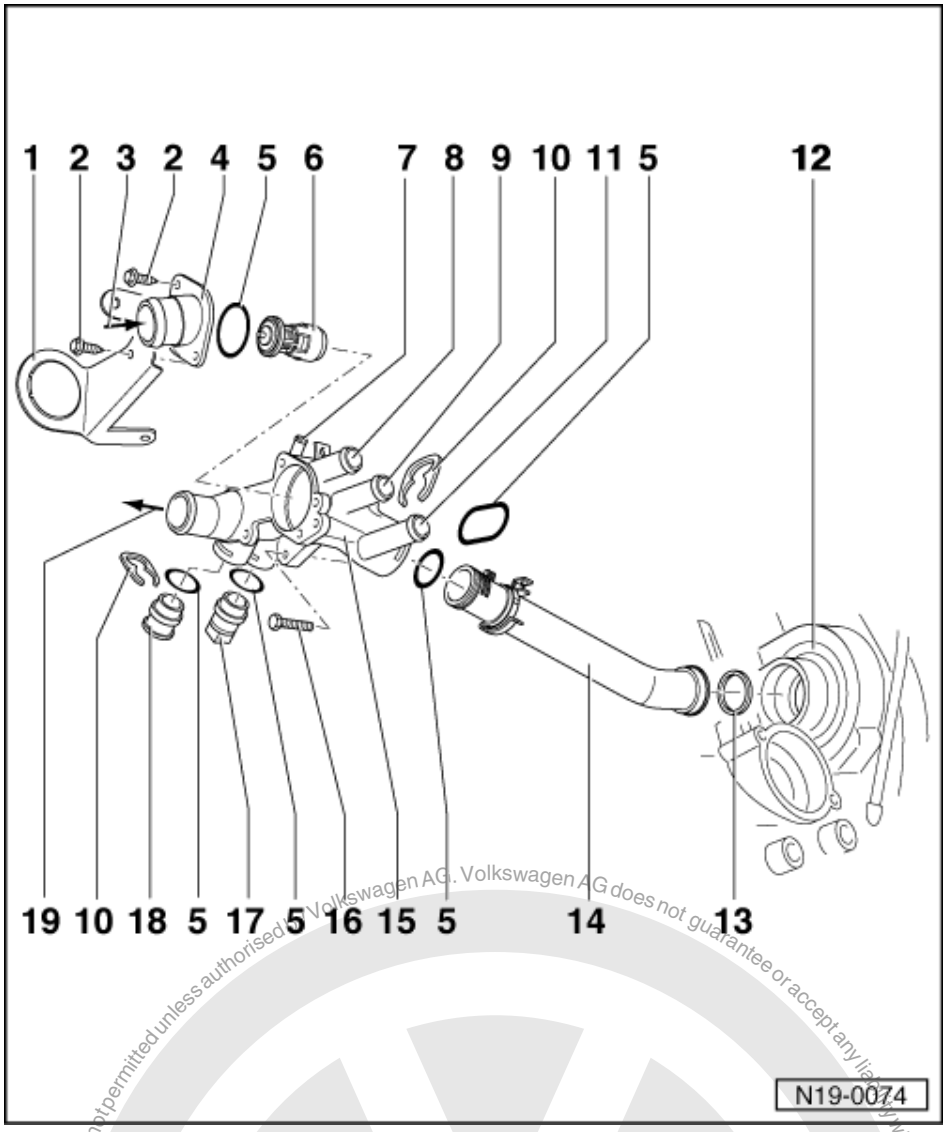

Thermostat side

1 Retainer
- For central connector

2 Self-tapping bolt

3 From bottom of radiator
- =>Page 74 , Item 16

4 Connection

5 O-ring
- Renew

6 Coolant thermostat
- Checking operation: heat-up thermostat in water the thermo element pin must move out
- Temperature check: Opening starts (approx. 84 °C) and ends (approx. 98 °C) cannot be checked.

satelettronica

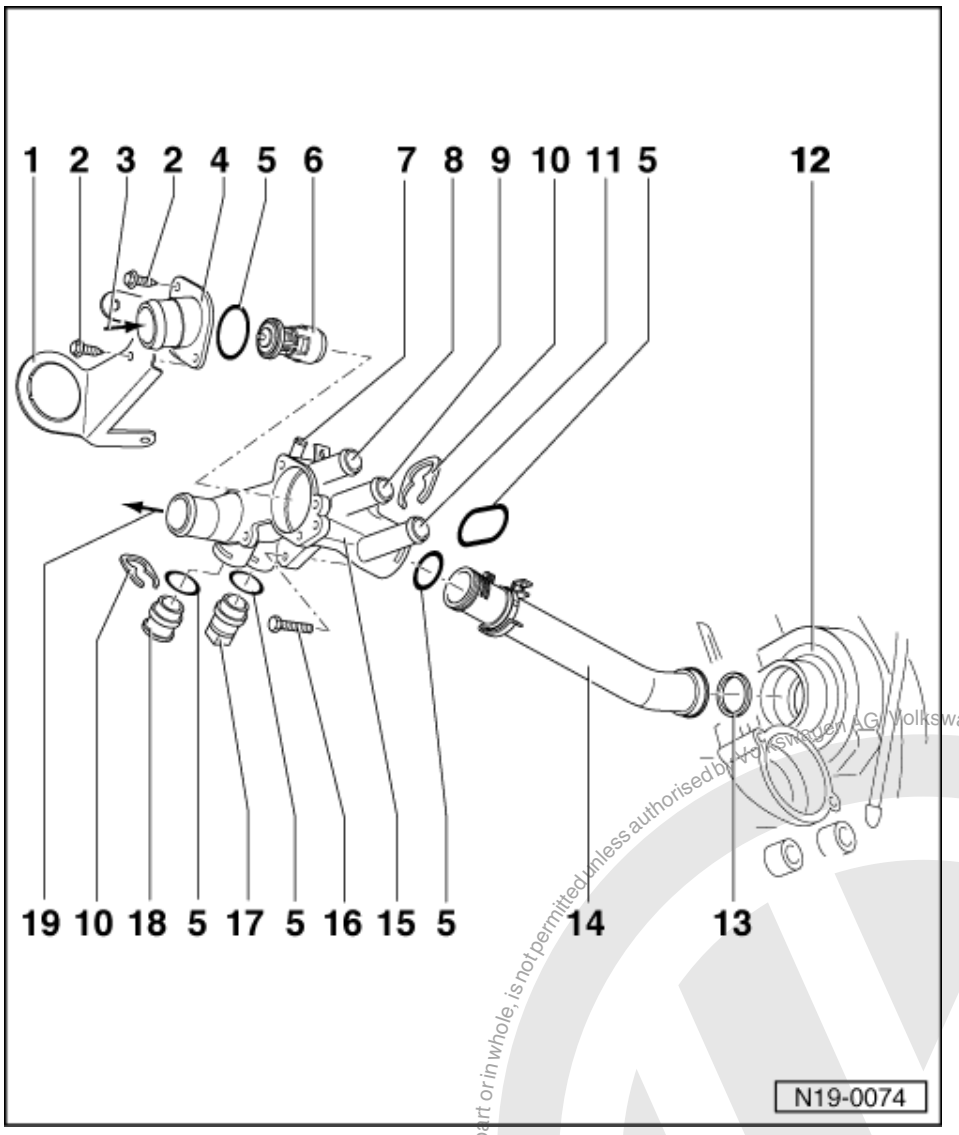

7 To expansion tank
- =>Page 74 , Item 15

8 To heat exchanger

9 From expansion tank
- =>Page 74 , Item 13

10 Retaining clip

11 From heat exchanger

12 Coolant pump housing on cylinder block

13 Seal
- Renew

14 Coolant pipe

15 Thermostat housing

16 10 Nm

Protected by copyright. Copying for private or commercial purposes, in part or in whole, is not permitted unless authorised by Volkswagen AG. Volkswagen AG does not guarantee or accept any liability with respect to the correctness of information in this document. Copyright by Volkswagen AG.
satelettronica

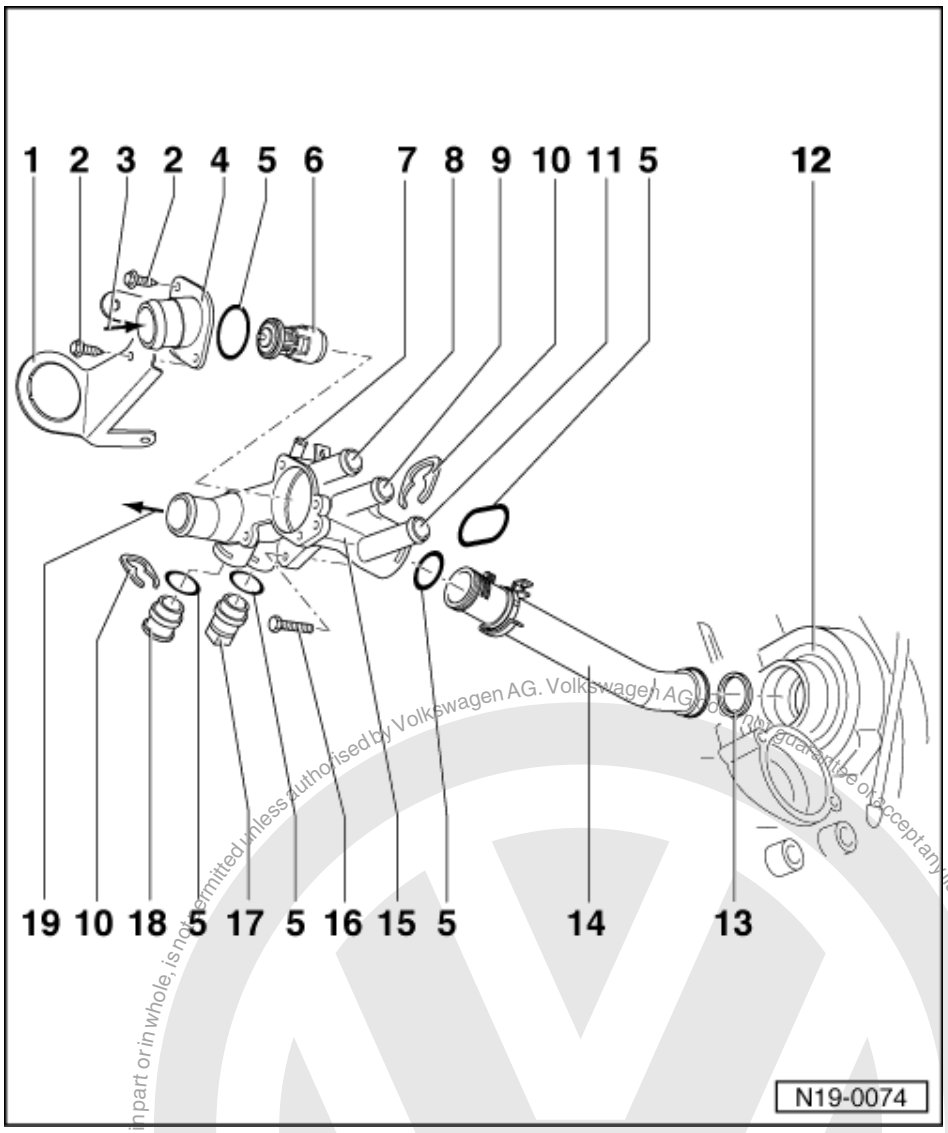

17 Coolant temperature sender (G62)
- With coolant temperature gauge sender (G2)

18 Sealing plug

19 To top of radiator
- =>Page 73 , Item 6

Protected by copyright. Copying for private or commercial purposes, in part or in whole, is not permitted unless authorised by Volkswagen AG. Volkswagen AG does not guarantee or accept any liability with respect to the correctness of information in this document. Copyright by Volkswagen AG.
satelettronica

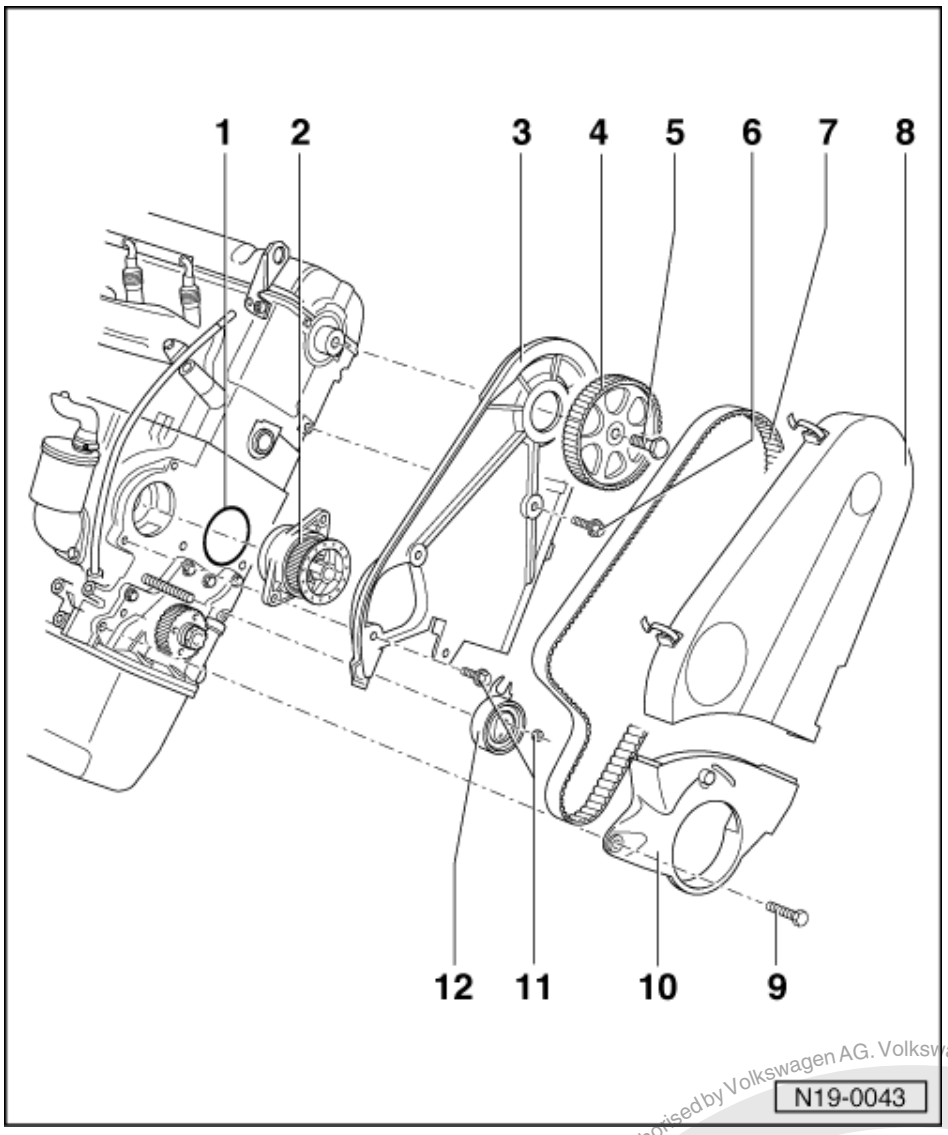

Coolant pump side

1 O-Ring
- Renew

2 Coolant pump
- Check for ease of movement
- If damaged or leaking renew complete

3 Rear toothed belt guard

4 Camshaft sprocket

5 20 Nm + 1/4 turn (90 °) further
- Renew

6 10 Nm
- Install with D6

7 Toothed belt
- Check for wear
- Do not kink
- Tensioning toothed belts => Page 18

satelettronica
Protected by copyright. Copying for private or commercial purposes, in part or in whole, is not permitted unless authorised by Volkswagen AG. Volkswagen AG does not guarantee or accept any liability with respect to the correctness of information in this document. Copyright by Volkswagen AG.

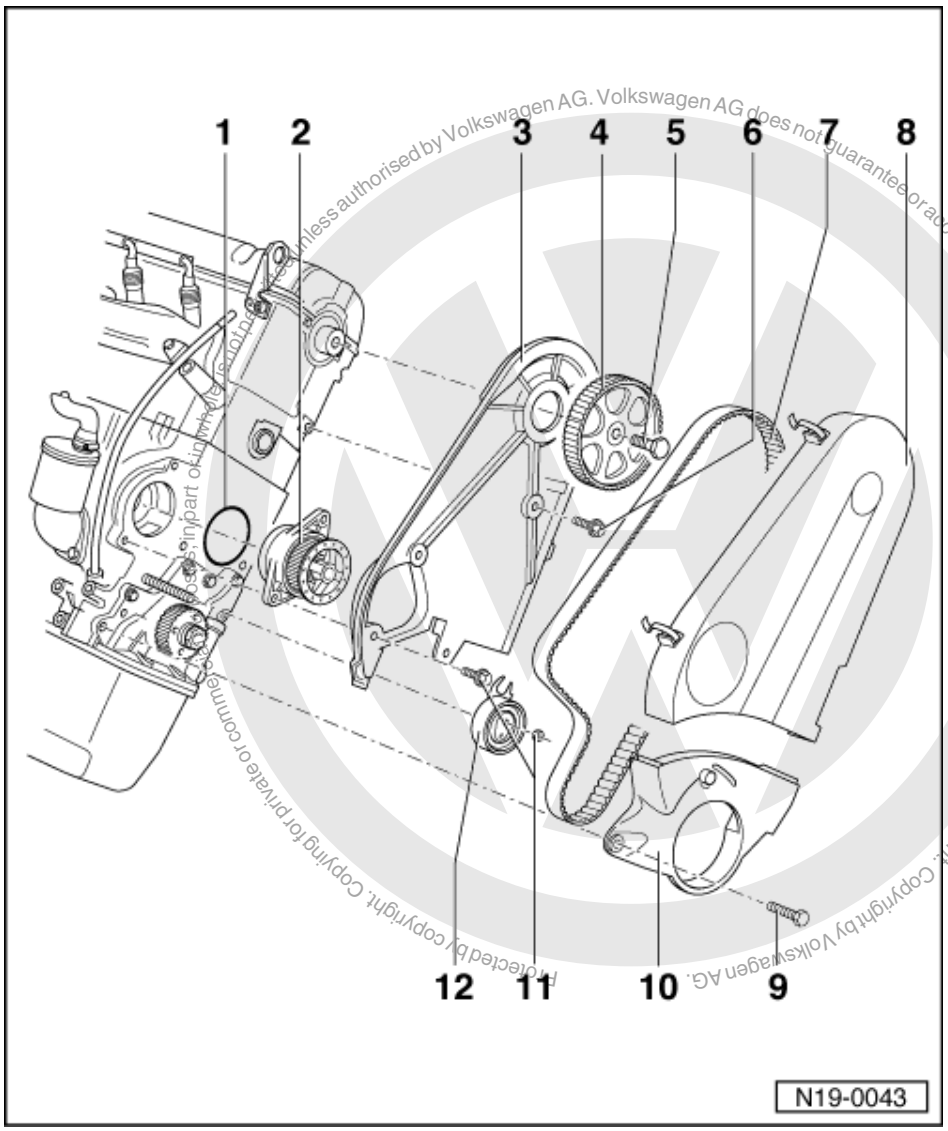

8 Toothed belt guard - upper part
9 10 Nm
10 Toothed belt guard - lower part
11 20 Nm
12 Tensioner

- Tensioning toothed belts
  => Page 18

1.4 - Draining and filling cooling system

Special tools, testers, measuring instruments and auxiliary items required

- Drip tray V.A.G 1306
- Pliers V.A.G 1921 for spring type clips
- Anti-freeze tester

Draining

- Open cap on coolant expansion tank.

satelettronica

- Drain coolant at lower hose on radiator.

If the cooling system was filled with G 11 anti-freeze -coloured green-:

- Cooling system must be flushed out as follows before refitting the coolant hose and filling with new coolant G 12 -coloured violet-:
- Remove as much of the coolant remains as is possible from the cooling system. To do this e.g. blow compressed air into the coolant expansion tank.
- Close cooling system and top with with pure water.
- Run engine at idling speed for approx. 2 minutes.
- Drain off coolant and blow out the cooling system again with compressed air.

Note:

Observe disposal regulations!

Filling

Notes:

- Only use coolant additive G 12 in accordance with TL VW 774 F.
  Distinguishing feature: coloured violet
- G 12 violet (in accordance with TL VW 774 F) can be mixed with the previous coolant additives G 11 and G 12 red!
- G 12 and coolant additives marked "In accordance with TL VW 774 F" prevent frost and corrosion damage, scaling and also raise boiling point of coolant. For this reason the system must be filled all year round with frost and corrosion protection additives.
- Because of its high boiling point, the coolant improves engine reliability under heavy loads, particularly in countries with tropical climates.
- Protection against frost must be assured to about -25 °C (in arctic climatic countries to about -35 °C).
- The coolant concentration must not be reduced by adding water even in warmer seasons and in warmer countries. The anti-freeze ratio must be at least 40 %.
- If for climatic reasons a greater frost protection is required, the amount of G 12 can be increased, but only up to 60 % (frost protection to about -40 °C), as otherwise frost protection is reduced again and cooling effectiveness is also reduced.
- If radiator, heat exchanger, cylinder head or cylinder head gasket is replaced, do not reuse old coolant.

Recommended mixture ratios:

Frost pro- tection to	Anti-freeze amount	G 121)	Water1)
-25 °C	40 %	2.2 l	3.3 l
-35 °C	50 %	2.75 l	2.75 l

1) The quantity of coolant can vary depending upon the vehicle equipment.

With cooling system charging unit VAS 6096

- Fill coolant circuit using cooling system charging unit VAS 6096.

=> Operating instructions for cooling system charging unit VAS 6096

Not using cooling system charging unit VAS 6096

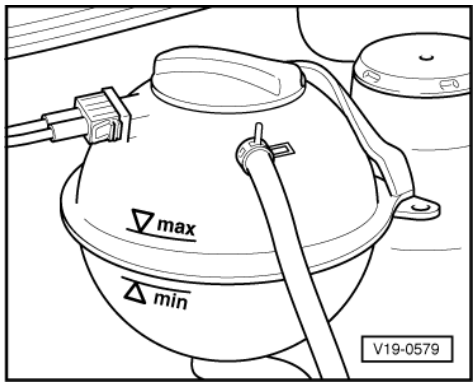

satelettronica

- -> Fill with coolant slowly up to max. mark on expansion tank. Filling takes approx. 5 minutes.

With and without cooling system charging unit VAS 6096

- Fit cap to expansion tank cap.

- Run engine until radiator fan cuts-in.
- Check coolant level and top-up if necessary. When the engine is at normal operating temperature, the coolant level must be on the max. mark and between the min. and max. marks when the engine is cold.

1.5 - Removing and installing radiator

Special tools, testers, measuring instruments and auxiliary items required

- Drip tray V.A.G 1306
- Pliers V.A.G 1921 for spring type clips

Removing

- Drain coolant => Page 80 .
- Pull upper coolant hose off radiator.
- Pull connectors off thermoswitch and fan motor.
- Remove fan ring together with fan(s).
- Remove radiator securing bolts and take out radiator.

Vehicles with air conditioning system:

- Observe additional information and removal work => Page 82 .

Installing

Installation is carried out in the reverse order, when doing this note the following:

Filling with new coolant => Page 80 .

Additional information and removal work on vehicles with air conditioner

Warning! The air conditioning system refrigerant circuit must not be opened.

Note:

To prevent damage to condenser and also to the refrigerant lines/hoses, ensure that the pipes and hoses are not stretched, kinked or bent.

- Remove retaining clamp(s) for refrigerant pipes/hoses.
- Remove condenser from radiator.
- Secure condenser to body so that refrigerant pipes/hoses are not stressed.

Protected by copyright. Copyright by Volkswagen AG. Volkswagen AG does not guarantee or accept any liability with respect to the correctness of information in this document. Copyright by Volkswagen AG. Reproduction, in whole or in part, is not permitted unless authorised by Volkswagen AG. Volkswagen AG does not guarantee or accept any liability with respect to the correctness of information in this document. Copyright by Volkswagen AG.
satelettronica

20 - Fuel supply system

1 - Removing and installing parts of fuel supply system

1.1 - Removing and installing parts of fuel supply system

Notes:

- Always replace clamp-type clips with spring or screw-type clips.
- Fuel hoses in engine compartment must only be secured with spring-type clips. The use of clamp or screw-type clips is not permissible.
- V.A.G 1921 pliers are recommended when installing spring-type clips.

Observe safety precautions=> Page 94 .

Observe rules for cleanliness => Page 95 .

Adjusting throttle cable => Page 95

Removing and installing accelerator pedal => Page 94 , Fig. 3

Protected by copyright. Copying for private or commercial purposes, in whole, is not permitted unless authorised by Volkswagen AG. Copyright by Volkswagen AG. does not guarantee or accept any liability with respect to the correctness of information in this document.

satelettronica

1.2 - Removing and installing fuel tank with its attachments

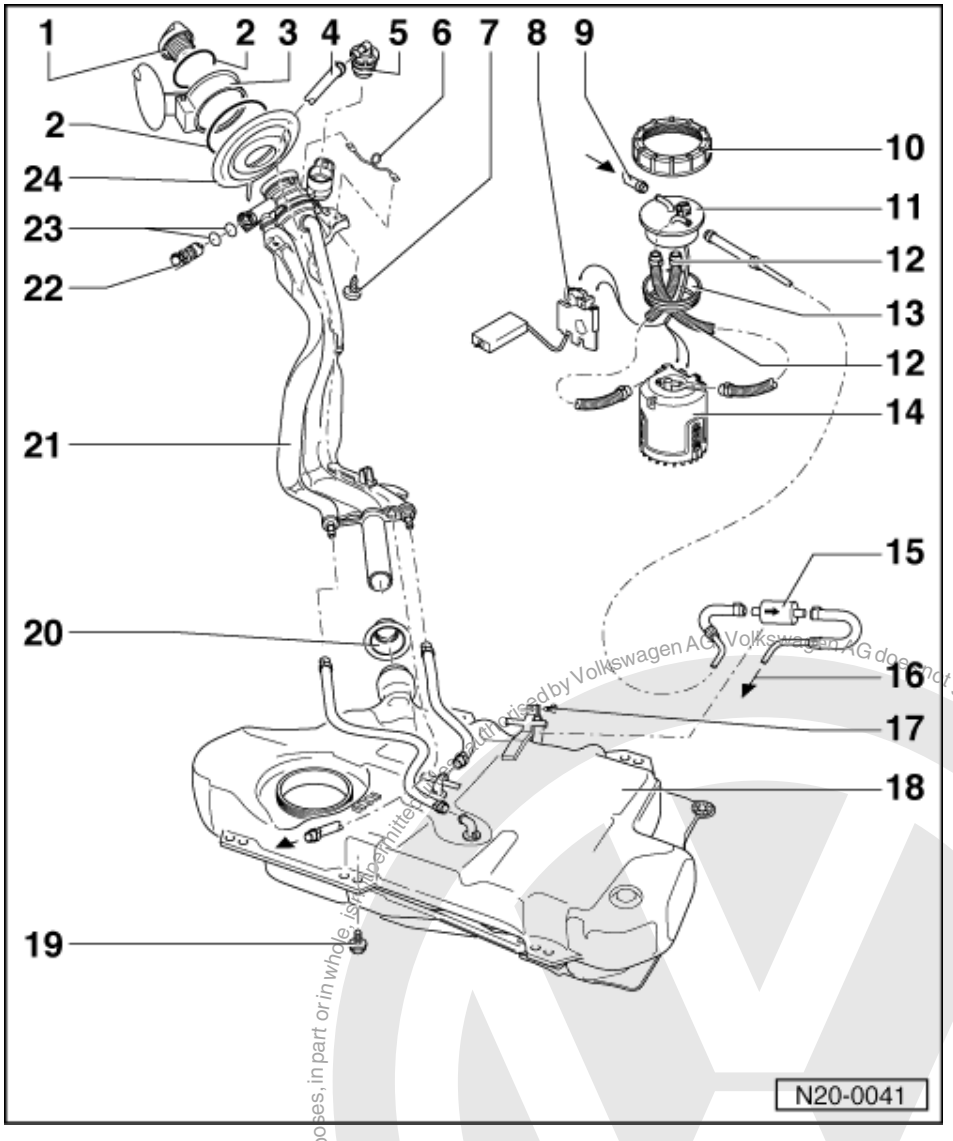

Fuel system Polo Classic, Polo Estate

Fuel system Caddy

=> Page 89

1 **Cap**
2 **Retaining ring**
3 **Tank flap unit**
- Removing and installing

=> General body repairs; Repair group 55; fuel flap unit fuel flap unit

4 **Vent pipe**
- To activated charcoal filter
  =>Page 104 , Item 8

satelettronica
Protected by copyright. Copying for private or commercial purposes, in part or in whole, is not permitted unless authorised by Volkswagen AG. Volkswagen AG does not guarantee or accept any liability with respect to the correctness of information in this document. Copyright by Volkswagen AG.

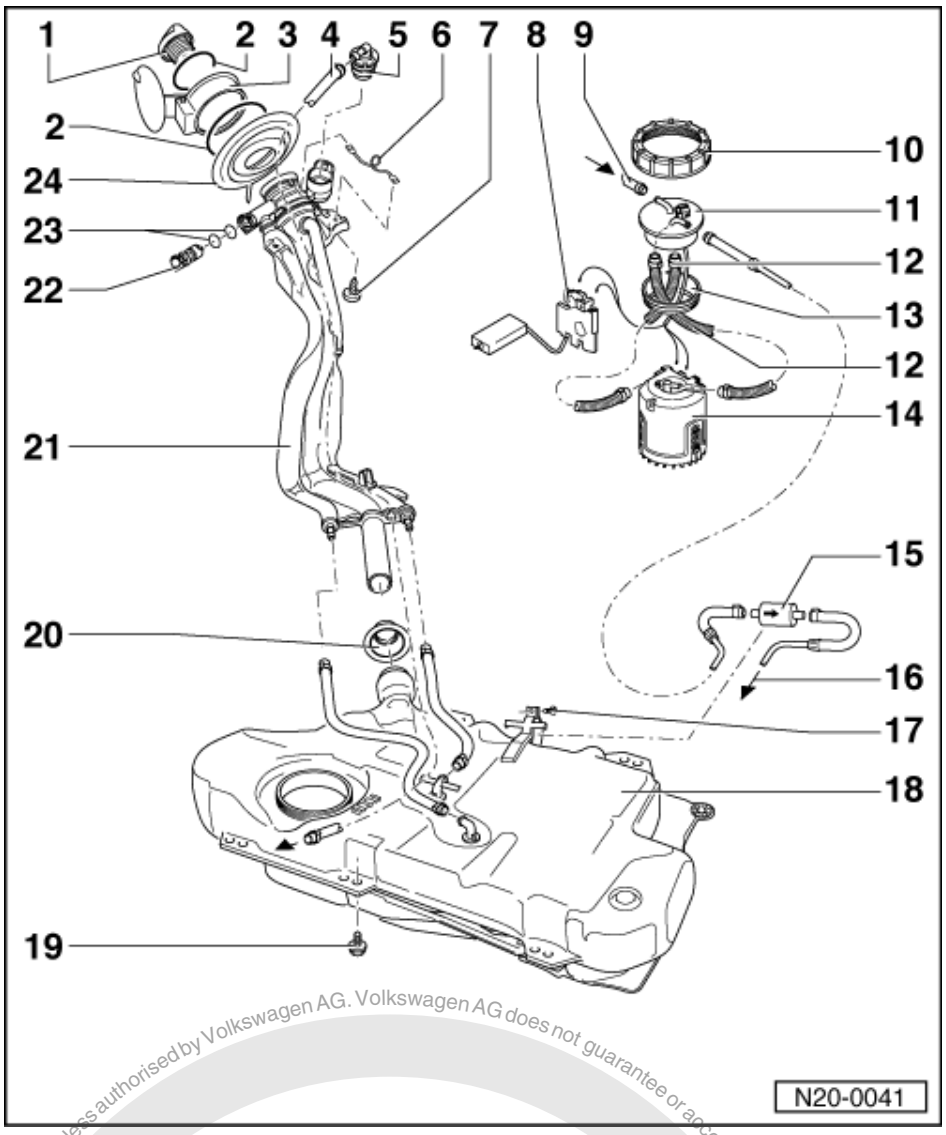

5 Gravity/overflow valve
- To remove, release locking lug and unclip valve upwards out of filler neck
- Check valve for through-flow
  valve vertical: open,
  valve tilted 90 °: closed

6 Earth connection

7 4 Nm

8 Fuel gauge sender

9 Return hose/line
- Blue or with blue marking
- To fuel manifold

=> Repair group 24; mixture preparation, injection mixture preparation, injection

10 Union nut, 75 Nm
- Remove and install with 3217

satelettronica
Protected by copyright. Copying for private or commercial purposes, in part or in whole, is not permitted unless authorised by Volkswagen AG. Volkswagen AG does not guarantee or accept any liability with respect to the correctness of information in this document. Copyright by Volkswagen AG.

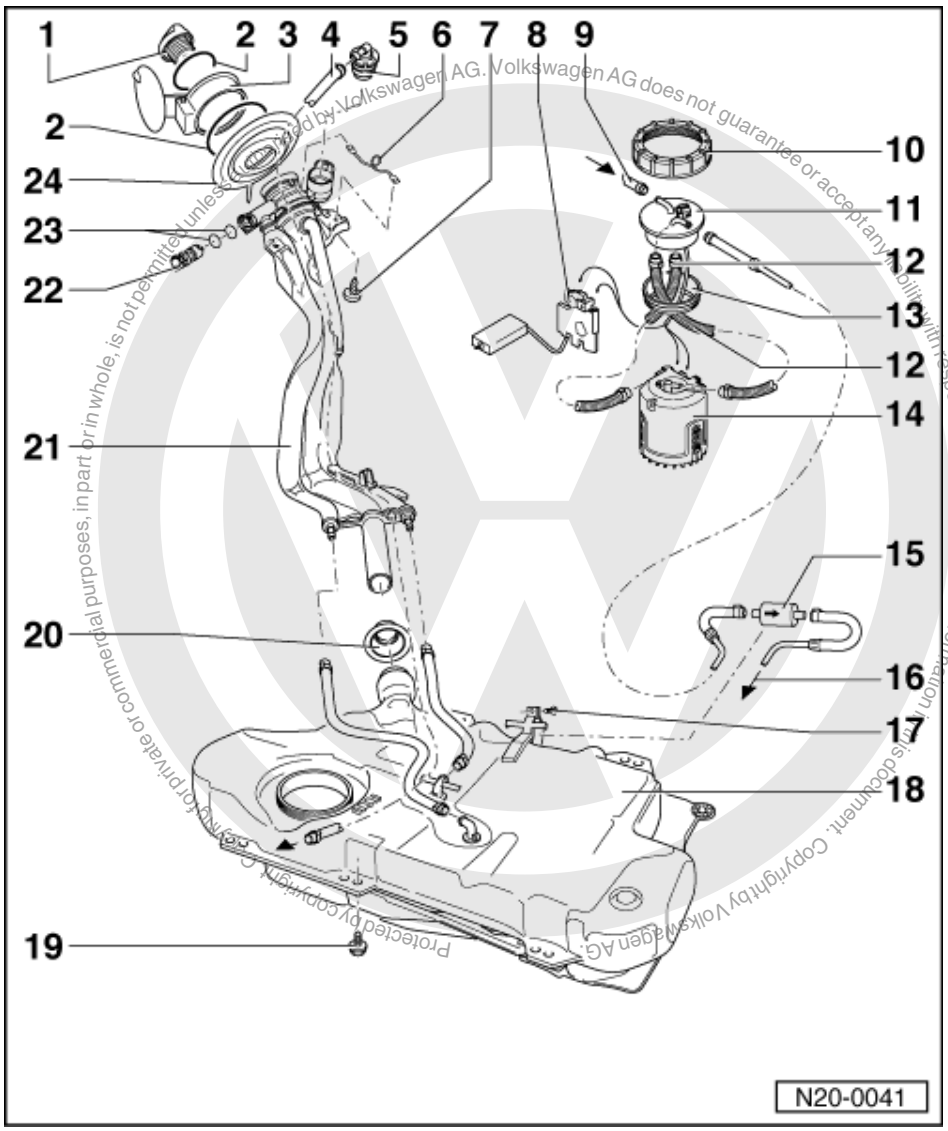

11 Flange
- Note fitting position on fuel tank => Fig. 1

12 Corrugated tube
- Must not contact fuel tank, otherwise pump noises will be transferred

13 Sealing ring
- Coat with fuel when installing
- Renew if damaged

14 Fuel delivery unit
- Removing and installing
  => Page 95
- Checking fuel pump
  => Page 96

Note:

After completing work on fuel delivery unit or fuel gauge sender ensure that the corrugated tubing between delivery unit and flange does not contact the fuel tank (transfer of pump noises).

satelettronica

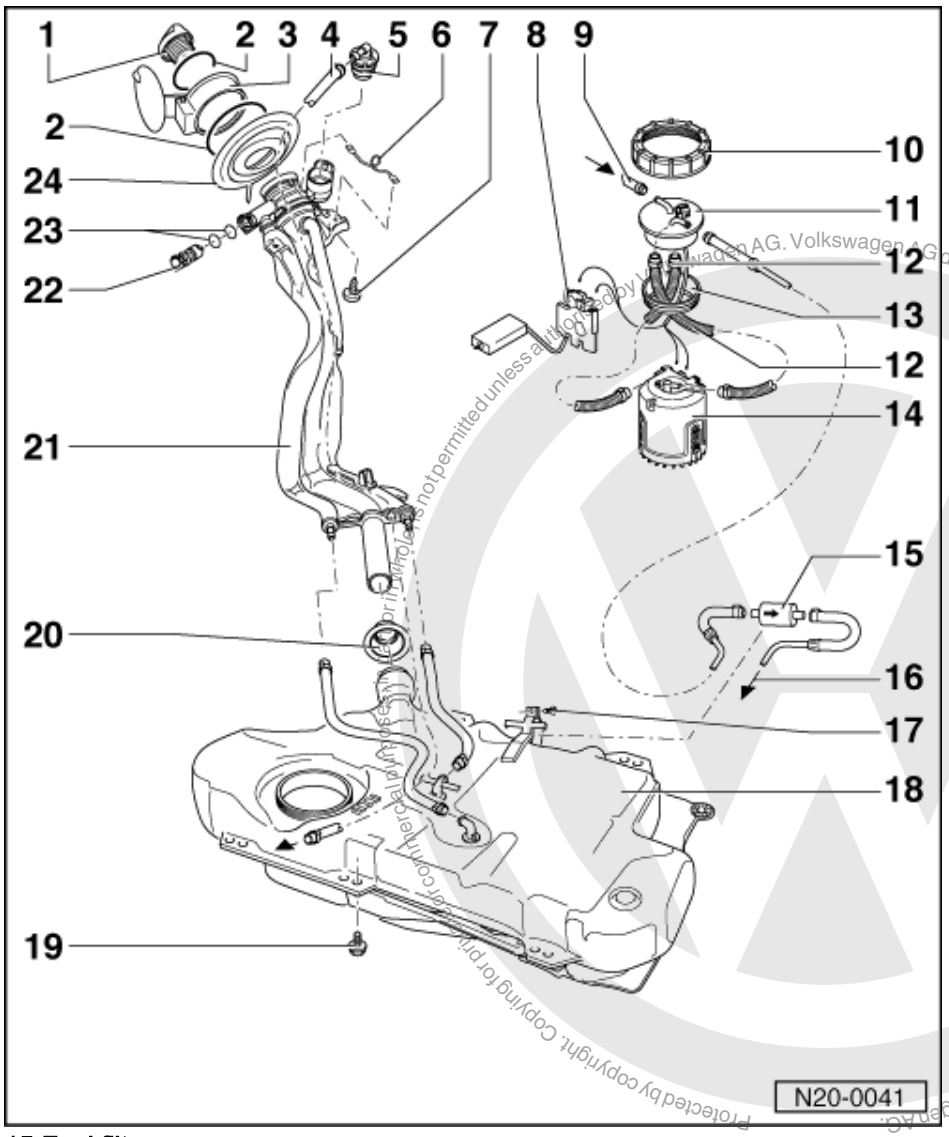

15 Fuel filter

- Fitting position: Arrow points in direction of flow

16 Supply pipe

- Black
- From fuel manifold

=> Repair group 24; mixture preparation, injection mixture preparation, injection

17 3 Nm

18 Fuel tank

- Removing and installing
  => Page 101
- Press clamping washer from heat shield tightly onto pins on vehicle floor

19 25 Nm

20 Sealing boot

- After installing filler pipes fit over fuel tank connections, having turned boot inside out

satelettronica

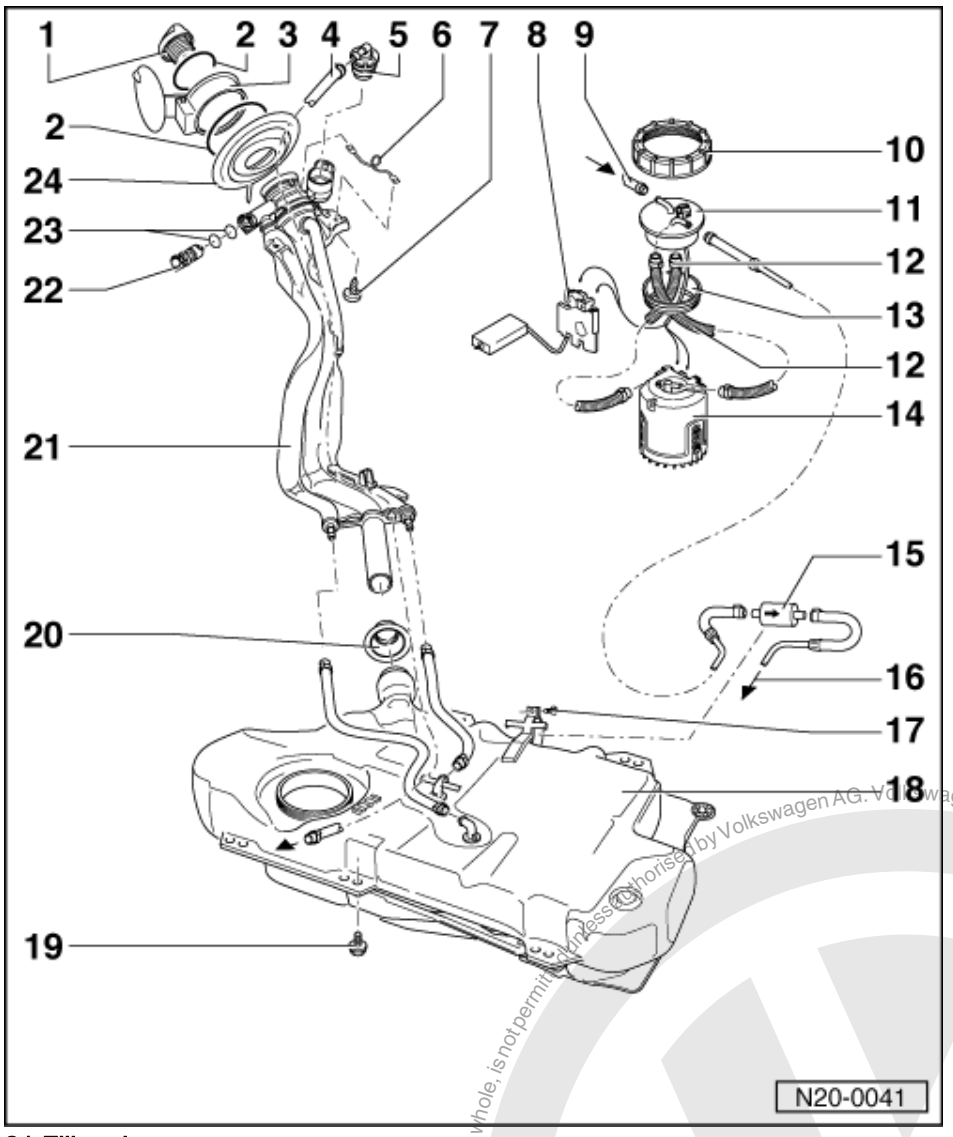

21 Filler pipes
- With non-return valve

22 Vent valve
- Checking =>Fig. 2
- To remove pull locking latch lightly to inside -arrow- and pull valve out

23 O-ring
- Renew if damaged

24 Cup
- For filler pipes

Protected by copyright. Copying for private or commercial purposes, in part or in whole, is not permitted unless authorised by Volkswagen AG. Volkswagen AG does not guarantee or accept any liability with respect to the correctness of information in this document. Copyright by Volkswagen AG.
satelettronica

Protected by copyright. Copying for private or commercial purposes, in part or in whole, is not permitted unless authorised by Volkswagen AG. Volkswagen AG does not guarantee or accept any liability with respect to the correctness of information in this document. Copyright by Volkswagen AG.

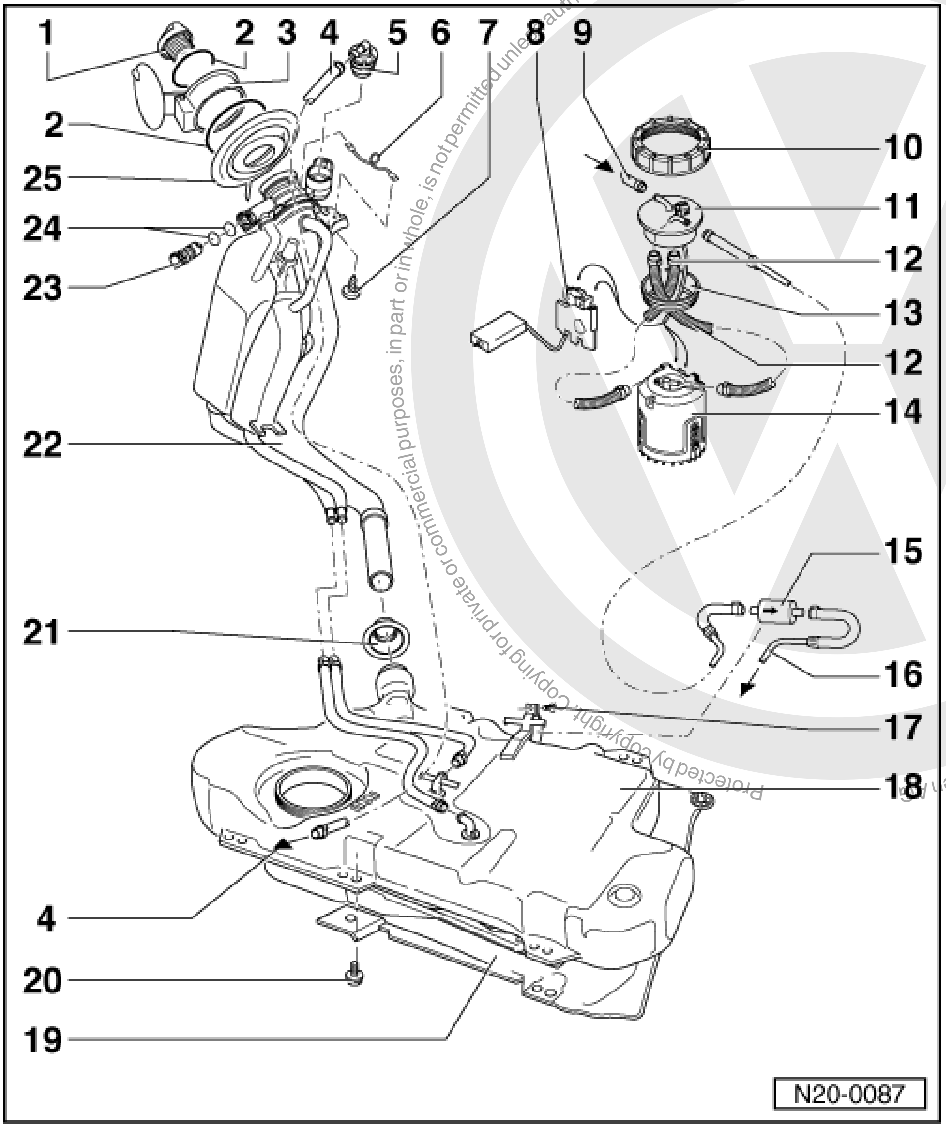

Fuel system Caddy

1 Cap
2 Retaining ring
3 Tank flap unit
- Removing and installing

=> General body repairs; Repair group 55; fuel flap unit fuel flap unit

4 Vent pipe
- To activated charcoal filter =>Page 104 , Item 8

5 Gravity/overflow valve
- To remove, release locking lug and unclip valve upwards out of filler neck
- Check valve for through-flow valve vertical: open, valve tilted 90 °: closed

6 Earth connection

satelettronica

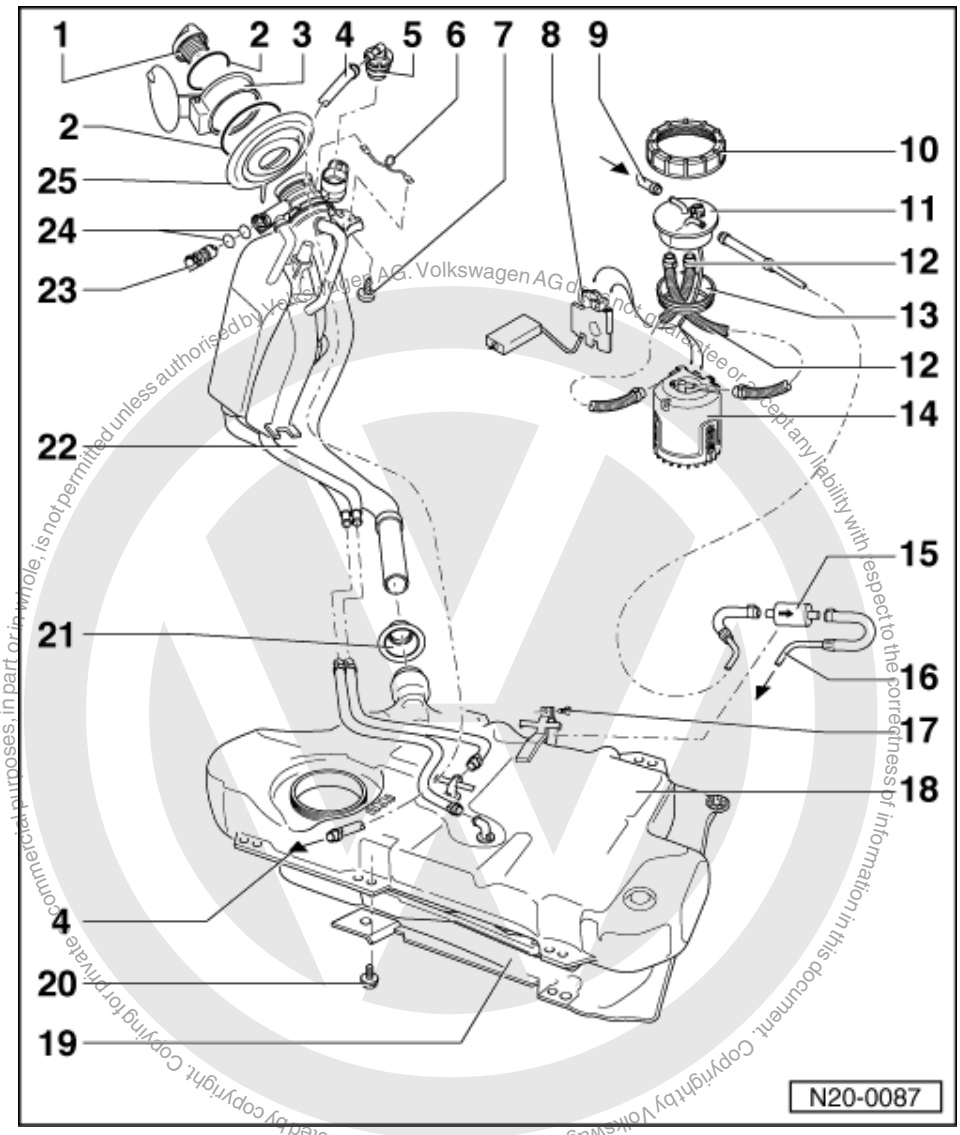

7 4 Nm
8 Fuel gauge sender
9 Return hose/line
- Blue or with blue marking
- From fuel manifold

=> Repair group 24; mixture preparation, injection mixture preparation, injection

10 Union nut, 75 Nm
- Remove and install with 3217

11 Flange
- Note fitting position on fuel tank => Fig. 1

12 Corrugated tube
- Must not contact fuel tank, otherwise pump noises will be transferred

13 Sealing ring
- Coat with fuel when installing
- Renew if damaged

satelettronica

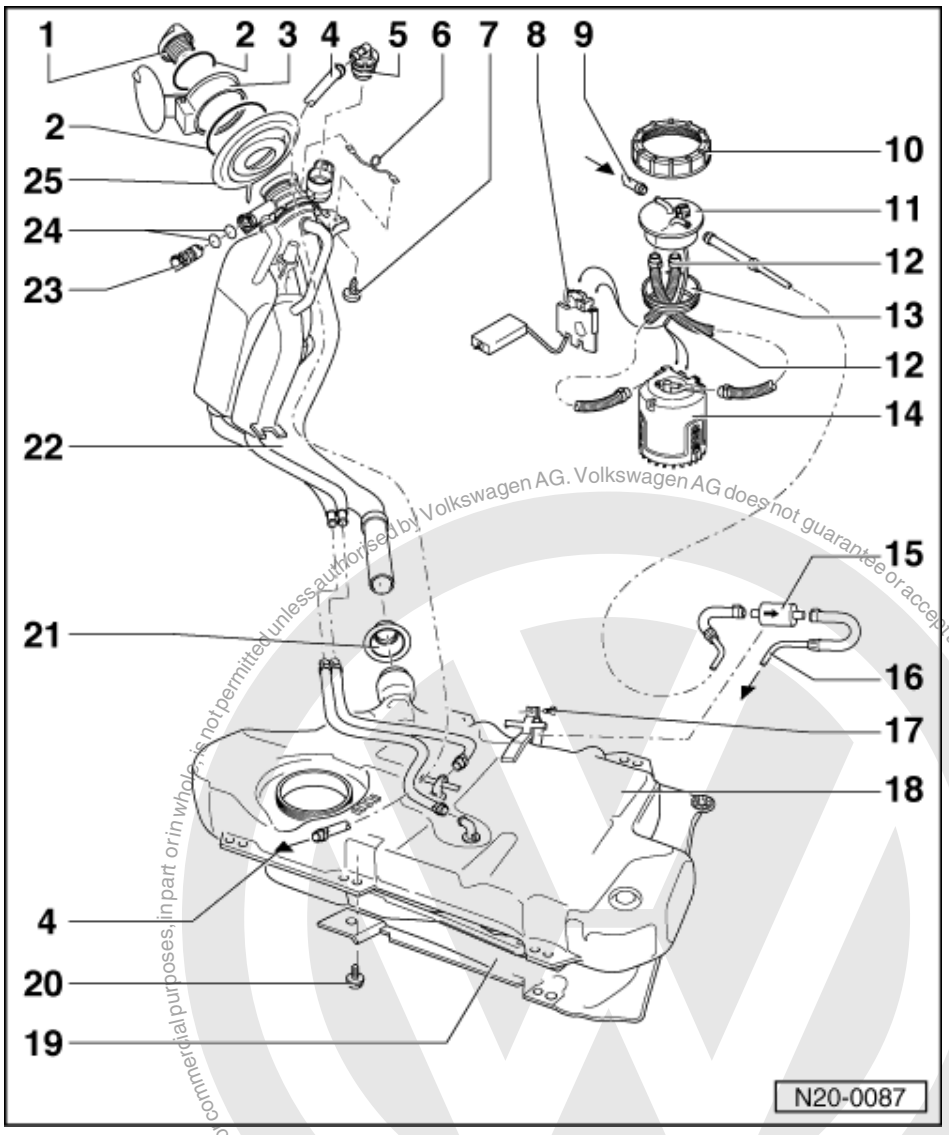

14 Fuel delivery unit

- Removing and installing
  => Page 95
- Checking fuel pump
  => Page 96

Note:

After completing work on fuel delivery unit or fuel gauge sender ensure that the corrugated tubing between delivery unit and flange does not contact the fuel tank (transfer of pump noises).

15 Fuel filter

- Fitting position: Arrow points in direction of flow

16 Supply pipe

- Black
- To fuel manifold

=> Repair group 24; mixture preparation, injection mixture preparation, injection

17 3 Nm

Protected by copyright. Copyright by Volkswagen AG. Volkswagen AG does not guarantee or accept any liability with respect to the correctness of information in this document. Copyright by Volkswagen AG. Commercial purposes, in part or in whole, is not permitted unless authorised by Volkswagen AG.
satelettronica

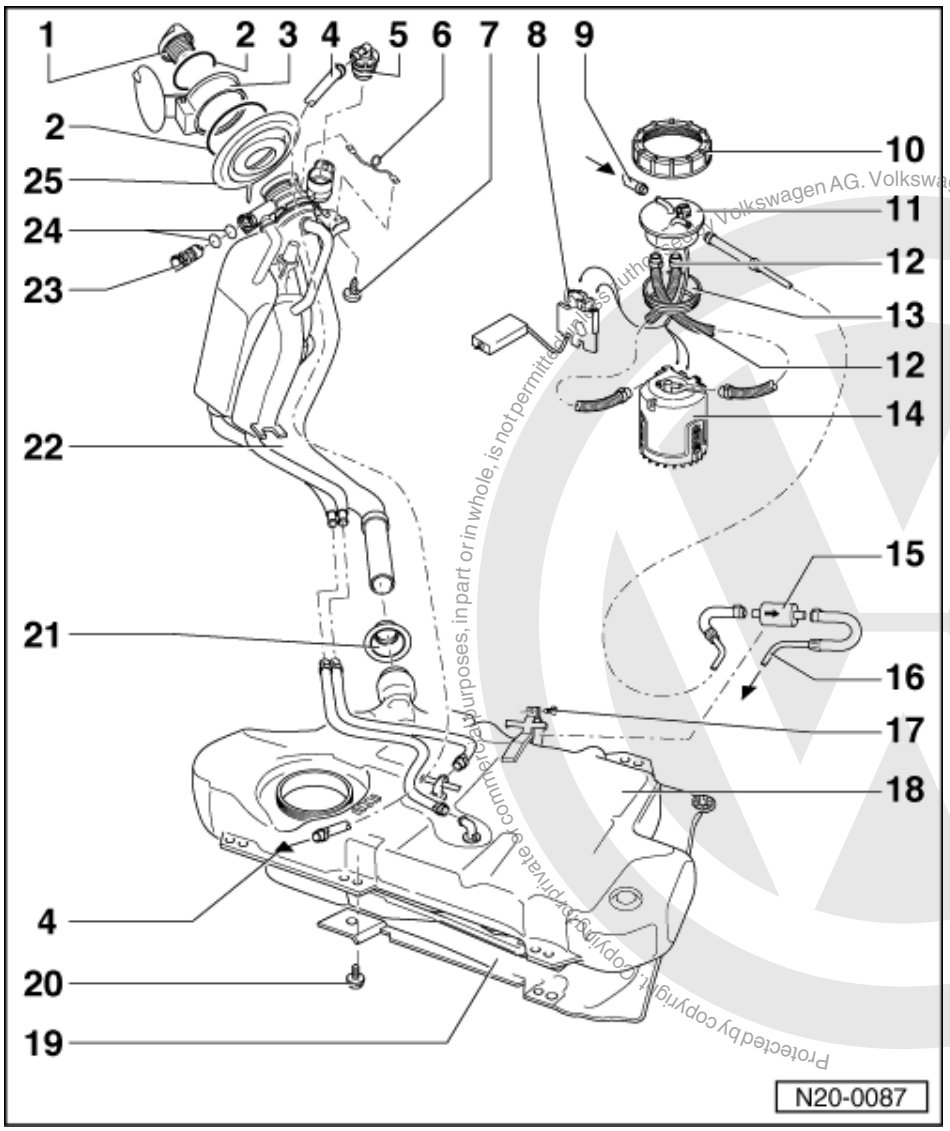

18 Fuel tank

- Removing and installing
  => Page 101

19 Heat shield

- Press clamping washer from heat shield tightly onto pins on vehicle floor

20 25 Nm

21 Sealing boot

- After installing filler pipes fit over fuel tank connections, having turned boot inside out

22 Filler neck

- With non-return valve

23 Vent valve

- Checking =>Fig. 2
- To remove pull locking latch lightly to inside -arrow- and pull valve out

Protected by copyright. Copyright by Volkswagen AG. Volkswagen AG does not guarantee or accept any liability with respect to the correctness of information in this document. Copyright by Volkswagen AG.
satelettronica

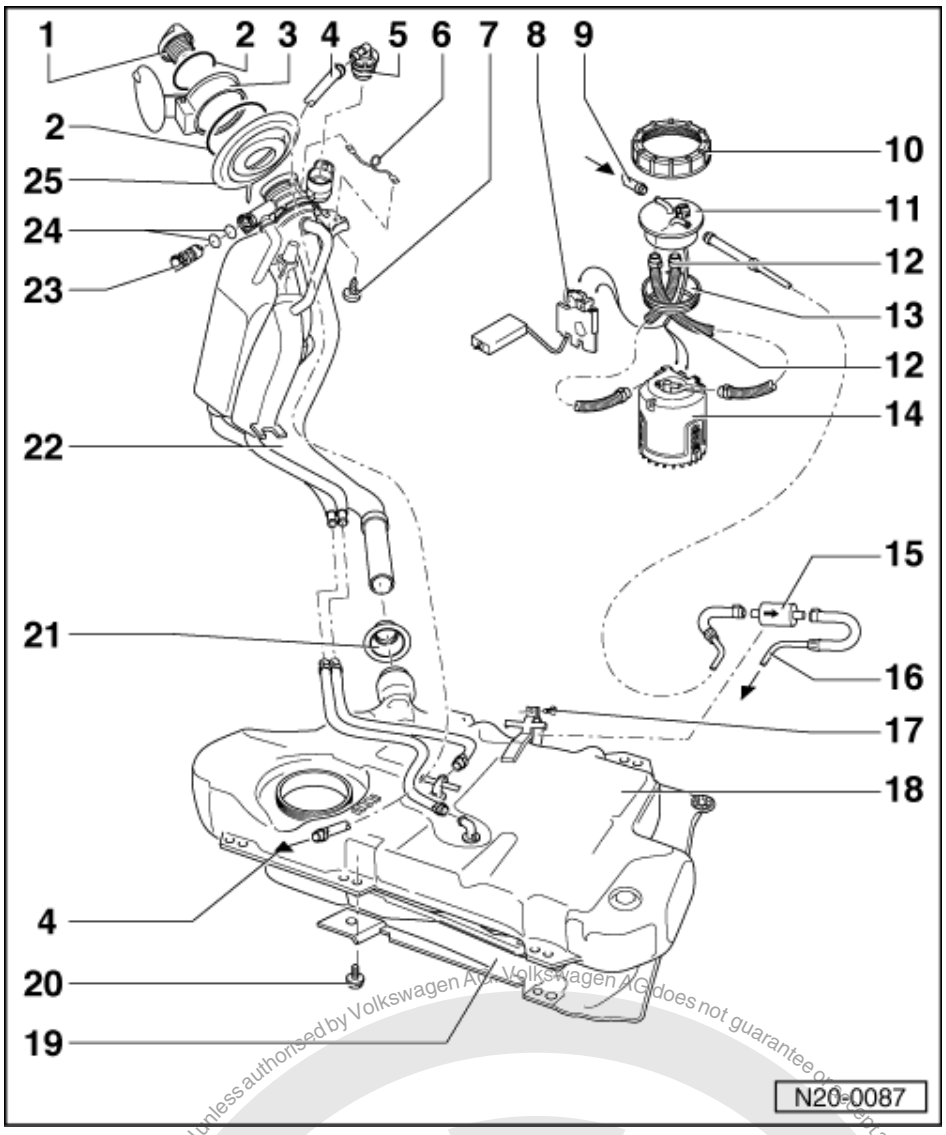

24 O-ring

- Renew if damaged

25 Cup

- For filler pipes

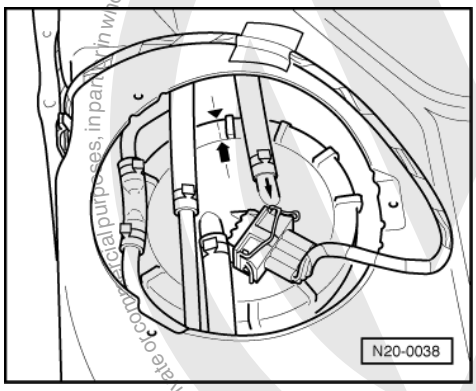

satelettronica
Protected by copyright. Copying for private or commercial purposes, in part or in whole, is not permitted unless authorised by Volkswagen AG. Volkswagen AG does not guarantee or assume any liability with respect to the correctness of information in this document. Copyright by Volkswagen AG.

-> Fig. 1 Installation position of fuel delivery unit flange

Marking on the flange must align with marking on the fuel tank.

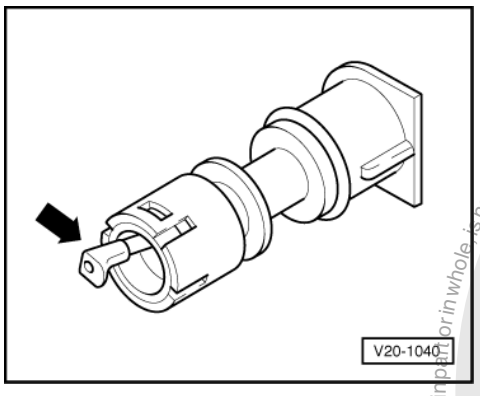

-> Fig. 2 Checking vent valve

Lever in rest position: Closed

Lever pushed in direction of arrow: Open

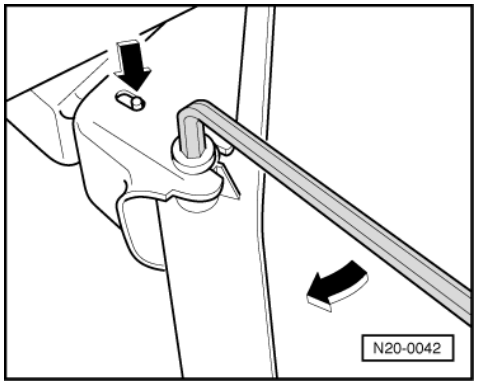

-> Fig. 3 Removing and installing accelerator pedal

To remove the accelerator pedal, press the accelerator pedal shaft locking device carefully out of the drilling - arrow-, then turn the shaft with a 6 mm hexagon key until it can be pulled out.

1.3 - Safety precautions when working on the fuel supply system

Warning!
Fuel supply lines are under pressure! Before removing from hose connection wrap a cloth around the connection. Then release pressure by carefully pulling hose off connection.

When removing and installing the fuel gauge sender or fuel pump (fuel delivery unit) from a full or partly full fuel tank the following must be observed:

- Before commencing work, switch on exhaust extraction system and place an extraction hose close to the sender opening in the fuel tank to extract escaping fuel fumes.
  If no exhaust extraction system is available, a radial fan (as long as motor is not in air flow) with a displacement greater than 15 m3/h can be used.

Protected by copyright. Copying for private or commercial purposes, in part or in whole, is not permitted unless authorised by Volkswagen AG. Volkswagen AG does not guarantee or accept any liability with respect to the correctness of information in this document. Copyright by Volkswagen AG.
satelettronica

- Prevent skin contact with fuel! Wear fuel-resistant gloves!

1.4 - Rules for cleanliness

When working on the fuel supply/injection system, pay careful attention to the following "5 rules":

- Thoroughly clean all unions and the adjacent areas before disconnecting.
- Place parts that have been removed on a clean surface and cover. Do not use fluffy cloths!
- Carefully cover opened components or seal, if the repair cannot be carried out immediately.
- Only install clean components:
  Only unpack replacement parts immediately prior to installation.
  Do not use parts that have been stored loose (e.g. in tool boxes etc.).
- When the system is open:
  Do not work with compressed air if this can be avoided.
  Do not move vehicle unless absolutely necessary.

1.5 - Adjusting throttle cable

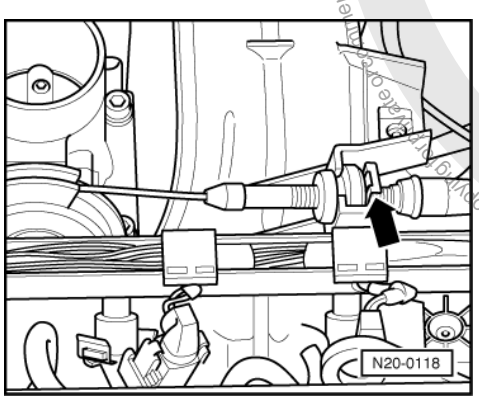

- -> Adjust throttle cable by moving the retainer at the support bracket so that the full throttle position is just attained at the throttle valve lever.

1.6 - Removing and installing fuel delivery unit

Note:

Check whether a coded radio is installed as during the forthcoming work sequences the battery earth strap must be disconnected. Obtain radio code first if necessary.

Special tools, testers, measuring instruments and auxiliary items required

- Union nut spanner 3217

Removing

- Note safety precautions before starting work => Page 94
- First disconnect battery earth band, with the ignition switched off.

Caddy Van:

- Lift front right section of load area floor covering.
- Remove right-hand load compartment floor panel.

Protected by copyright. Copying for private or commercial purposes, in part or in whole, is not permitted unless authorised by Volkswagen AG. Volkswagen AG does not guarantee or accept any liability with respect to the correctness of information in this document. Copyright by Volkswagen AG.
satelettronica

=> General body repairs; Repair group 70; Removing and installing load compartment floor panel (Caddy)
Removing and installing load compartment floor panel (Caddy)

- Remove floor cover.

Caddy Kombi, Polo Classic, Polo Estate:

- Fold rear seat forwards.
- Remove floor cover.

When the floor cover is removed:

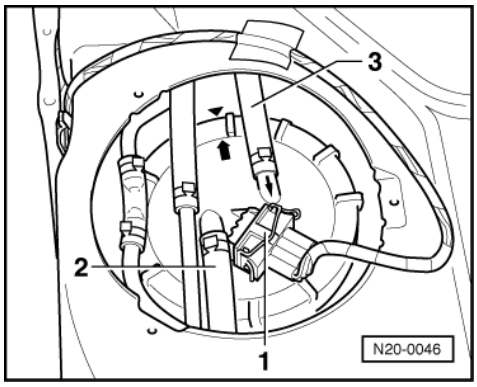

- -> Pull off connector -1- and supply and return pipes -2, 3- on flange.
- Remove union nut from flange with 3217.
- Pull flange and seal out from opening in fuel tank.
- Release delivery unit from bayonet connection by turning to left and remove from fuel tank.

Note:

If the delivery unit is to be renewed then drain old delivery unit before disposal.

Installing

- Installing the fuel delivery unit is carried out in the reverse order.

Notes:

- When inserting the fuel delivery unit ensure that the fuel gauge sender is not bent.
- When the fuel delivery unit is correctly installed the fuel gauge sender float points to fuel filler pipes.
- Coat flange seal with fuel when fitting.
- Fitting position of fuel delivery unit flange => Page 94 , Fig. 1 .

1.7 - Checking fuel pump

Special tools, testers, measuring instruments and auxiliary items required

- Remote control V.A.G 1348/3A with adapter cable V.A.G 1348/3-2
- Adapter set V.A.G 1594
- Multimeter V.A.G 1715
- Diode test lamp V.A.G 1527
- Current flow diagram
- Union nut spanner 3217
- Pressure tester V.A.G 1318
- Adapter 1318/1
- Adapter 1318/7
- Adapter 1318/10
- Adapter 1318/13
- Measuring container

satelettronica

- V.A.G 1332 Torque wrench (40...200 Nm)

Test conditions

- The battery voltage must be OK.
- Fuse 18 must be OK.

Checking function and voltage supply

Note:

Check whether a coded radio is installed as during the forthcoming work sequences the battery earth strap must be disconnected. Obtain radio code first if necessary.

- Briefly operate starter. Fuel pump must be heard to run briefly -approx. 1 second-.

If the fuel pump does not run:

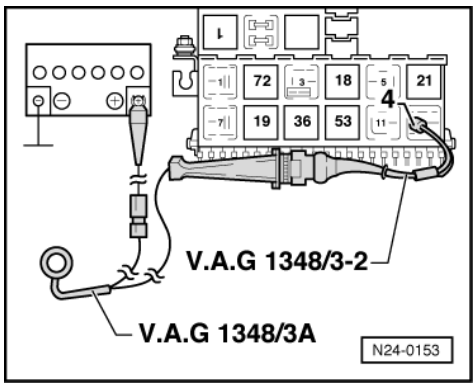

- -> Pull fuel pump relay (J17) out from relay plate with fuse box (relay position 12).

Note:

If the relay cannot be removed from the relay plate without tools then first disconnect battery earth strap.

- Connect remote control V.A.G 1348/3A with adapter cable V.A.G 1348/3-2 to contact 4 and battery positive (+).
- Operate remote control.

Fuel pump runs:

- Check activation of fuel pump relay:

=> Current flow diagrams, Electrical fault finding and Fitting locations, Fuel supply system

Fuel pump does not run:

Caddy Van:

- Lift front right section of load area floor covering.
- Remove right-hand load compartment floor panel.

=> General body repairs; Repair group 70; Removing and installing load compartment floor panel (Caddy)
Removing and installing load compartment floor panel (Caddy)

- Remove floor cover.

Caddy Kombi, Polo Classic, Polo Estate:

- Fold rear seat forwards.

satelettronica
Protected by copyright. Copying for private or commercial purposes, in part or in whole, is not permitted unless authorised by Volkswagen AG. Volkswagen AG does not guarantee or accept any liability with respect to the correctness of information in this document. Copyright by Volkswagen AG.

- Remove floor cover.

When the floor cover is removed:

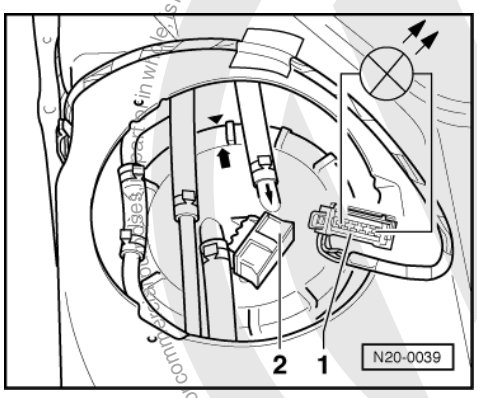

- -> Pull 4-pin connector -1- off fuel tank flange -2-.
- Connect diode test lamp V.A.G 1527 using aux. cables from V.A.G 1594 to the outer contacts of the connector.
- Operate remote control.
  LED must light up

LED does not light up:

- Locate and eliminate open circuit using current flow diagram

LED lights up (voltage supply OK.):

- Unscrew union nut from flange with 3217.
- Check if the electric wiring between flange and fuel pump is connected.

If not open circuit can be found:

- Renew fuel delivery unit.

Checking delivery rate

Test conditions

- Voltage supply OK.
- Remote control V.A.G 1348/3A connected.

Test sequence

- Remove filler cap from fuel tank filler neck.

Warning!
Fuel supply lines are under pressure! Before removing from hose connection wrap a cloth around the connection. Then release pressure by carefully pulling hose off connection.

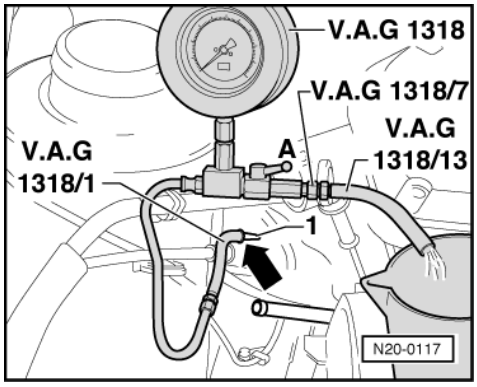

satelettronica

- -> Pull fuel supply hose (white marking) off fuel supply pipe -1-.
- Connect pressure gauge V.A.G 1318 with adapter /1 to fuel supply pipe.
- Screw adapter hose /13 with adapter /7 to pressure gauge and hold hose in measuring container.
- Open the pressure gauge shut-off tap. The lever then points in the direction of flow -A-.
- Operate remote control V.A.G 1348/3A. Whilst doing this slowly close the cut-off tap, until gauge shows 3 bar.
  From now on do not alter the position of the cut-off tap.
- Empty the measuring container.
- Connect multimeter to vehicle battery to measure voltage using auxiliary cables from V.A.G 1594.
- Operate remote control for 30 seconds
  and measure battery voltage

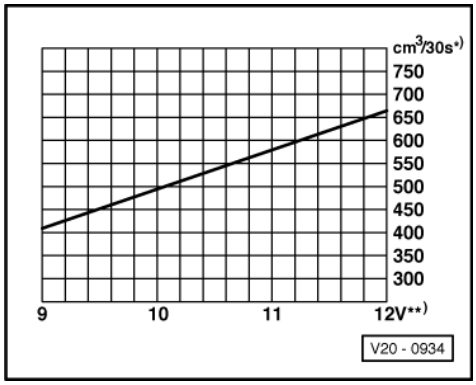

- -> Compare the quantity of fuel delivered with specification.

*) Minimum delivery cm3/30 seconds

**) Voltage at fuel pump with engine stopped and pump running (approx. 2 volts less than battery voltage).

If the minimum delivery rate is not attained:

- Check the fuel pipes for possible restrictions (kinks) or blockages.

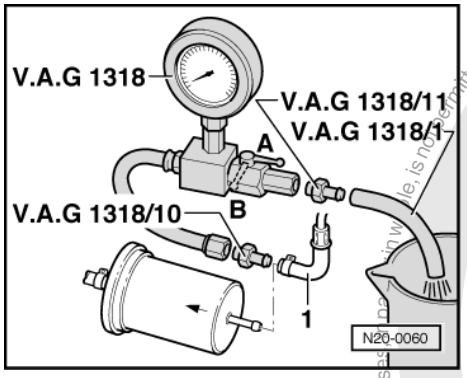

- -> Pull the supply hose -1- off inlet to fuel filter.
- Connect the pressure gauge V.A.G 1318 to hose with adapter 1318/10.
- Repeat delivery rate check.

If the minimum delivery rate is now attained:

- Replace the fuel filter.

If the minimum delivery rate is again not attained:

- Remove the fuel delivery unit and check the strainer filter for soiling.

Only when up to now no fault has been detected:

Protected by copyright. Copying for private or commercial purposes, in whole or in part, is not permitted unless authorised by Volkswagen AG. Volkswagen AG does not guarantee or accept any liability with respect to the correctness of information in this document. Copyright by Volkswagen AG.
satelettronica

- Replace the fuel delivery unit.

If the delivery rate has been attained but nevertheless you suspect a fuel supply system fault (e.g. intermittent failure of fuel supply system):

- Check the current draw of the fuel pump as follows:
- Reconnect all disconnected fuel pipes.

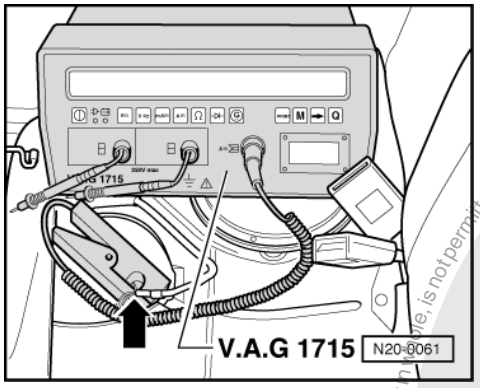

- -> Connect the multimeter V.A.G 1715 using the current clamp to the red/yellow wire from wiring loom.
- Start the engine and run at idling speed.
- Measure the current draw of the fuel pump.
  Specification: max. 8 amps.

Note:

If the fuel system malfunction is intermittent, you can perform the check during a test drive with the help of a 2nd person.

If the current draw is exceeded:

- Replace the fuel delivery unit.

Checking fuel pump non-return valve

Test conditions

- Remote control V.A.G 1348/3A connected
- Pressure gauge V.A.G 1318 connected

Test sequence

Note:

With this check the fuel supply pipe connections from the fuel delivery unit to the point at which the pressure gauge V.A.G 1318 is connected will be checked for leaks at the same time.

- Close pressure gauge cut-off tap (lever at right angle to direction of flow).
- Operate remote control at short intervals until a pressure of
  3 bar
  has built up.

Warning!
Danger of spray when opening the shut-offtap, hold container over the free connection of the pressure gauge.

- If pressure builds up too high, lower excess pressure by carefully opening the shut-off tap.
- Watch pressure drop. After 10 minutes the pressure must not drop below
  2 bar.

Protected by copyright. Copying for private or commercial purposes, in part or in whole, is not permitted unless authorised by Volkswagen AG. Volkswagen AG does not guarantee or accept any liability with respect to the correctness of information in this document. Copyright by Volkswagen AG.
satelettronica

If the pressure drops further:
- Check pipe connections for leaks.

If no fault is detected in the wiring:
- Replace the fuel delivery unit.

1.8 - Removing and installing fuel tank

Note:
Check whether a coded radio is installed as during the forthcoming work sequences the battery earth strap must be disconnected. Obtain radio code first if necessary.

Removing
- First disconnect battery earth band, with the ignition switched off.

Caddy Van:
- Lift front right section of load area floor covering.
- Remove right-hand load compartment floor panel.

=> General body repairs; Repair group 70; Removing and installing load compartment floor panel (Caddy)
Removing and installing load compartment floor panel (Caddy)
- Remove floor cover.

Caddy Kombi, Polo Classic, Polo Estate:
- Fold rear seat forwards.
- Remove floor cover.

When the floor cover is removed:

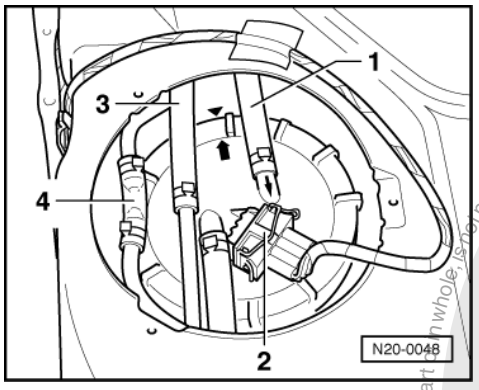

- -> Pull off fuel return hose -1- and connector -2- on flange.
- Separate fuel supply pipe -3- and breather pipe -4- at hose connections.
- Drain fuel tank.

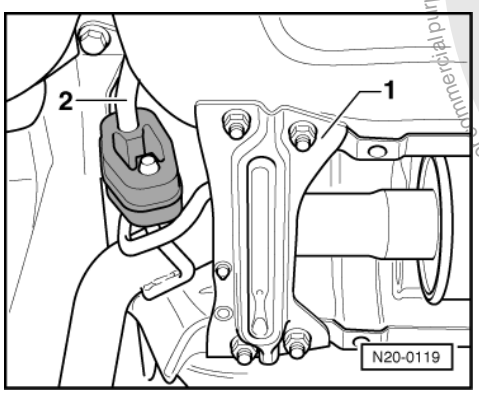

satelettronica
Protected by copyright. Copying for private or commercial purposes, in part or in whole, is not permitted unless authorised by Volkswagen AG. Volkswagen AG does not guarantee or accept any liability with respect to the correctness of information in this document. Copyright by Volkswagen AG.

- -> Remove rear connecting support -1-.
- Remove all rear exhaust system mountings -2- from body and secure the slightly lowered exhaust system with wire to body.
- Remove rear right wheel.
- Remove rear right wheel housing liner.
- Unbolt filler neck from body.
- Take filler cap off filler neck and unclip neck from cup.

Polo Classic, Polo Estate:

- Pull off breather hoses at filler neck.
- Remove clamping disc for fuel tank heat shield.
- Unbolt fuel tank from body and lower tank slightly using gearbox jack.
- Remove filler neck.
- Take out fuel tank together with heat shield.

Caddy:

- Remove upper securing nut on shock absorber and push securing bolt inwards approx. 2 cm (do not remove shock absorber).
- Remove heat shield on fuel tank.
- Remove fuel tank, when doing this the filler neck must be guided between shock absorber and spring (turn fuel tank through 90°).

Installing

Install in reverse order but note following:

- Breather and fuel hoses are to be installed kink-free.
- Secure fuel hoses with screw-type clamps.
- Do not interchange supply and return hose (return hose blue or blue markings, supply hose black).

Protected by copyright. Copying for private or commercial purposes, in part or in whole, is not permitted unless authorised by Volkswagen AG. Volkswagen AG does not guarantee or accept any liability with respect to the correctness of information in this document. Copyright by Volkswagen AG.

satelettronica

1.9 - Removing and installing parts of the activated charcoal filter system

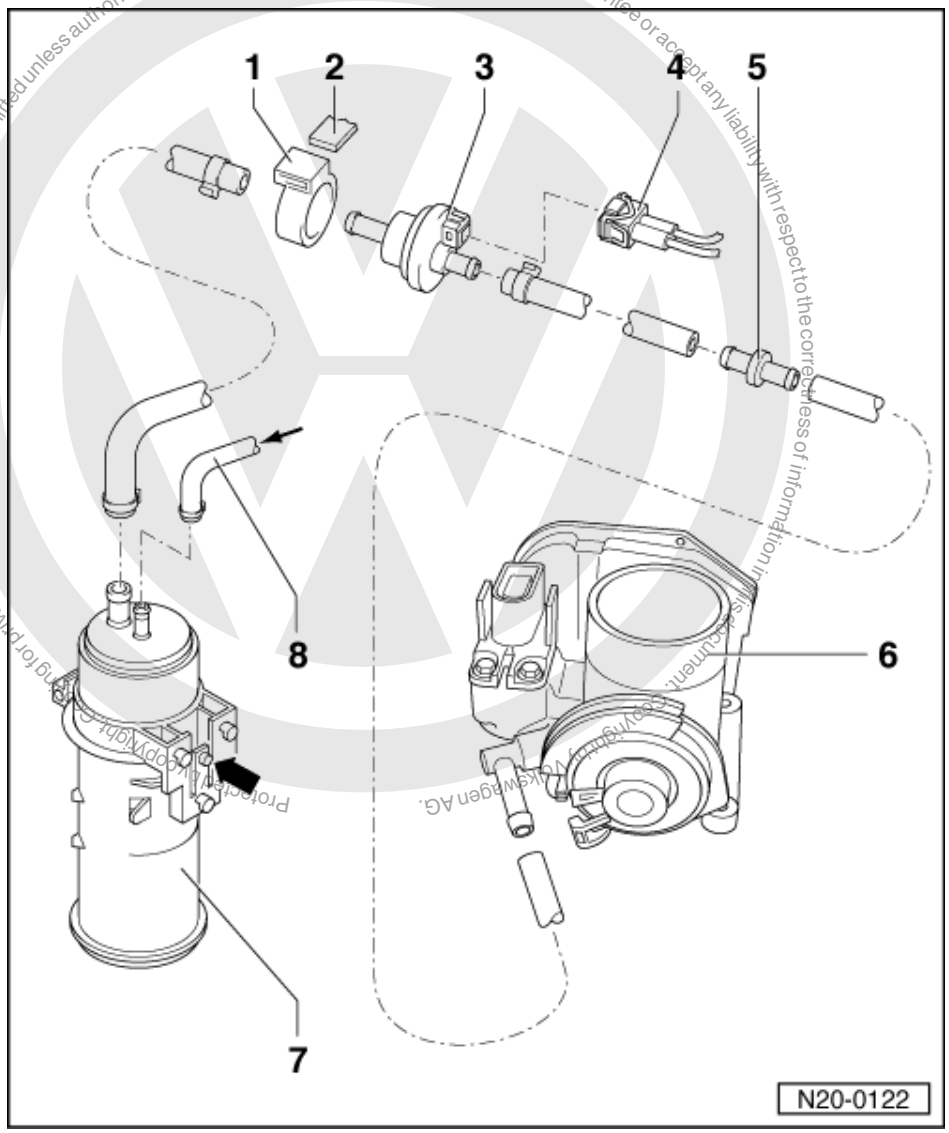

1 Retaining ring
2 Bracket
- On body front right

3 Solenoid valve 1 (N80)
- Valve closed with ignition switched off
- Valve activated (pulsed) by Motronic unit when the engine is warm
- Checking:

=> Repair group 01; Self-diagnosis; Final control diagnosis Self-diagnosis Final control diagnosis

4 Connector
5 Connector
6 Throttle valve control part (J338)

satelettronica

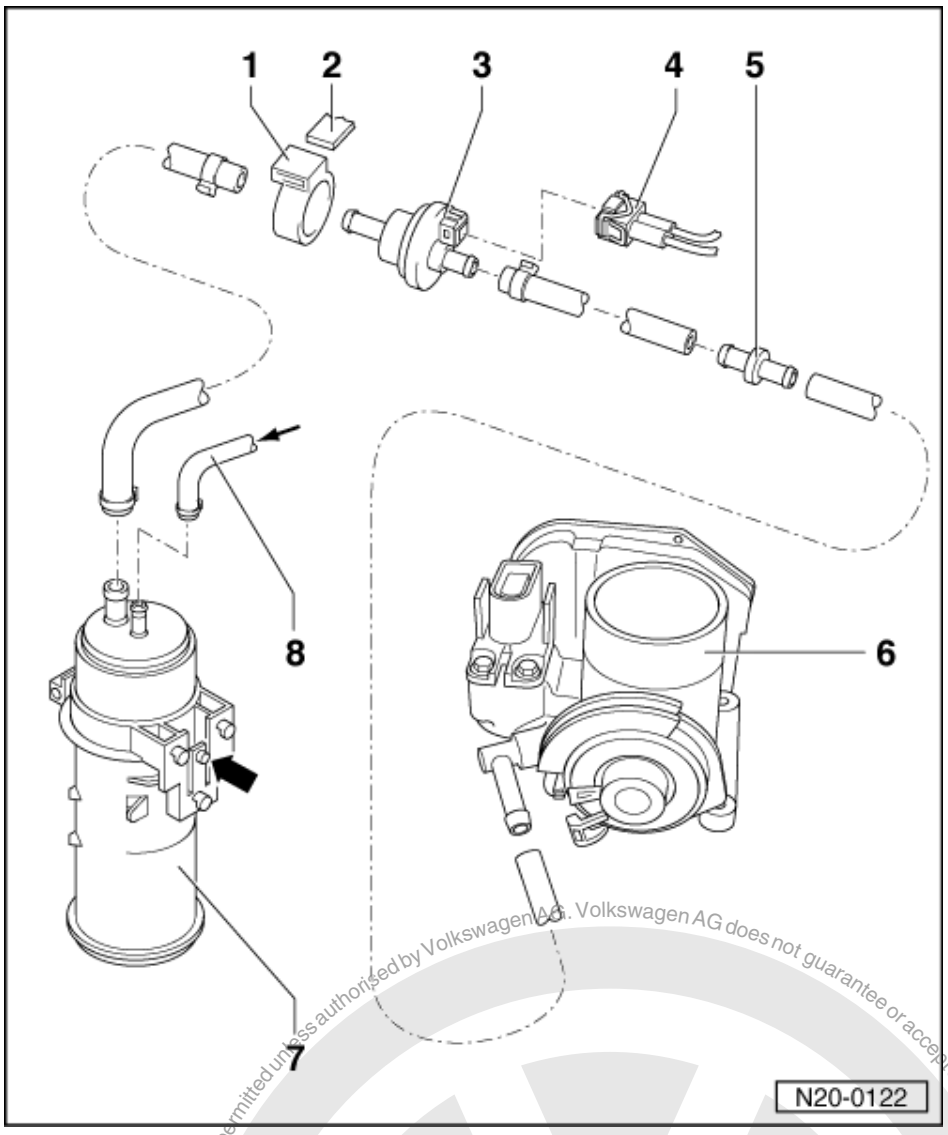

7 Activated charcoal filter
- Location: in front right wheel housing
- To remove, release securing tab -arrow- and push container out upwards

8 Breather pipe
- From gravity/overflow valve on fuel tank
  Polo Classic, Polo Estate
  =>Page 89 , Item 4

1.10 - Checking fuel tank breather

Special tools, testers, measuring instruments and auxiliary items required

- Hand vacuum pump V.A.G 1390
- Vacuum tester V.A.G 1368

Test conditions

- Ignition switched off

Protected by copyright. Copying for private or commercial purposes, in part or in whole, is not permitted unless authorised by Volkswagen AG. Volkswagen AG does not guarantee or accept any liability with respect to the correctness of information in this document. Copyright by Volkswagen AG.
satelettronica

Checking activated charcoal filter

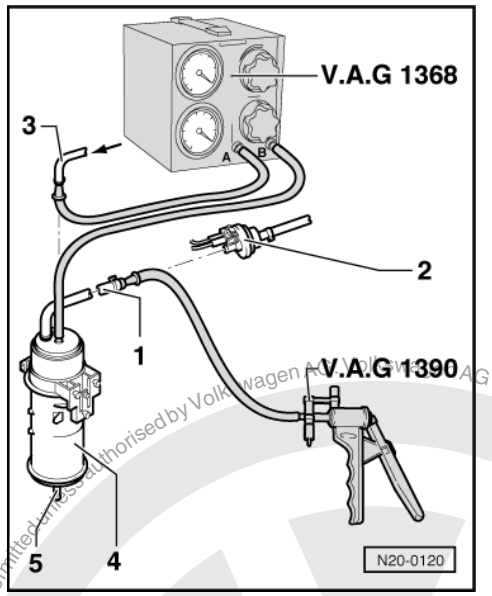

- -> Pull off breather hose -1- on solenoid valve -2- (from activated charcoal filter).
- Connect hand vacuum pump V.A.G 1390 to hose -1-.
- Pull breather hose -3- from fuel tank off activated charcoal filter -4- and connect to -connection A- of vacuum tester V.A.G 1368.
- Connect vacuum tester V.A.G 1368 -connection B- to activated charcoal filter.
- Set vacuum tester to position -B-.

- Operate hand vacuum pump V.A.G 1390 several times.
  Vacuum must not
  build up.

If vacuum builds up:

- Check breather connection -5- on activated charcoal filter -4- for soiling, clean if necessary.

Checking lines to fuel tank and fuel cap

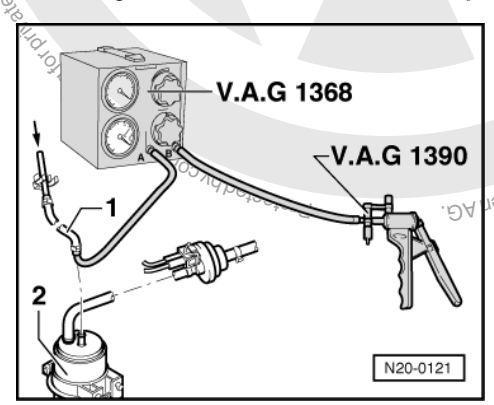

- -> Pull breather hose -1- from fuel tank off at activated charcoal filter -2-.
- Connect hand vacuum pump V.A.G 1390 and vacuum tester V.A.G 1368 as shown to hose -1-.
- Set vacuum tester to -A/B- position.
- Remove fuel filler cap from filler neck.
- Operate V.A.G 1390 several times. Vacuum must
  not build-up.

If vacuum builds-up:

- Check gravity/overflow valve.
  Polo Classic, Polo Estate => Page 89 , Item 5

satelettronica

- Check line -1- from fuel tank for blockage.

If vacuum does not build up:

- Refit fuel filler cap.
- Operate hand vacuum pump V.A.G 1390 several times.
  Vacuum must not
  build up.

Note:

If the fuel level in the tank is low the hand vacuum must be operated at least 20...30 times.

If vacuum builds up:

- Replace fuel tank cap.

Protected by copyright. Copyright for private or commercial purposes, in part or in whole, is not permitted unless authorised by Volkswagen AG. Volkswagen AG does not guarantee or accept any liability with respect to the correctness of information in this document. Copyright by Volkswagen AG.

satelettronica

26 - Exhaust system

1 - Removing and installing parts of exhaust system

1.1 - Removing and installing parts of exhaust system

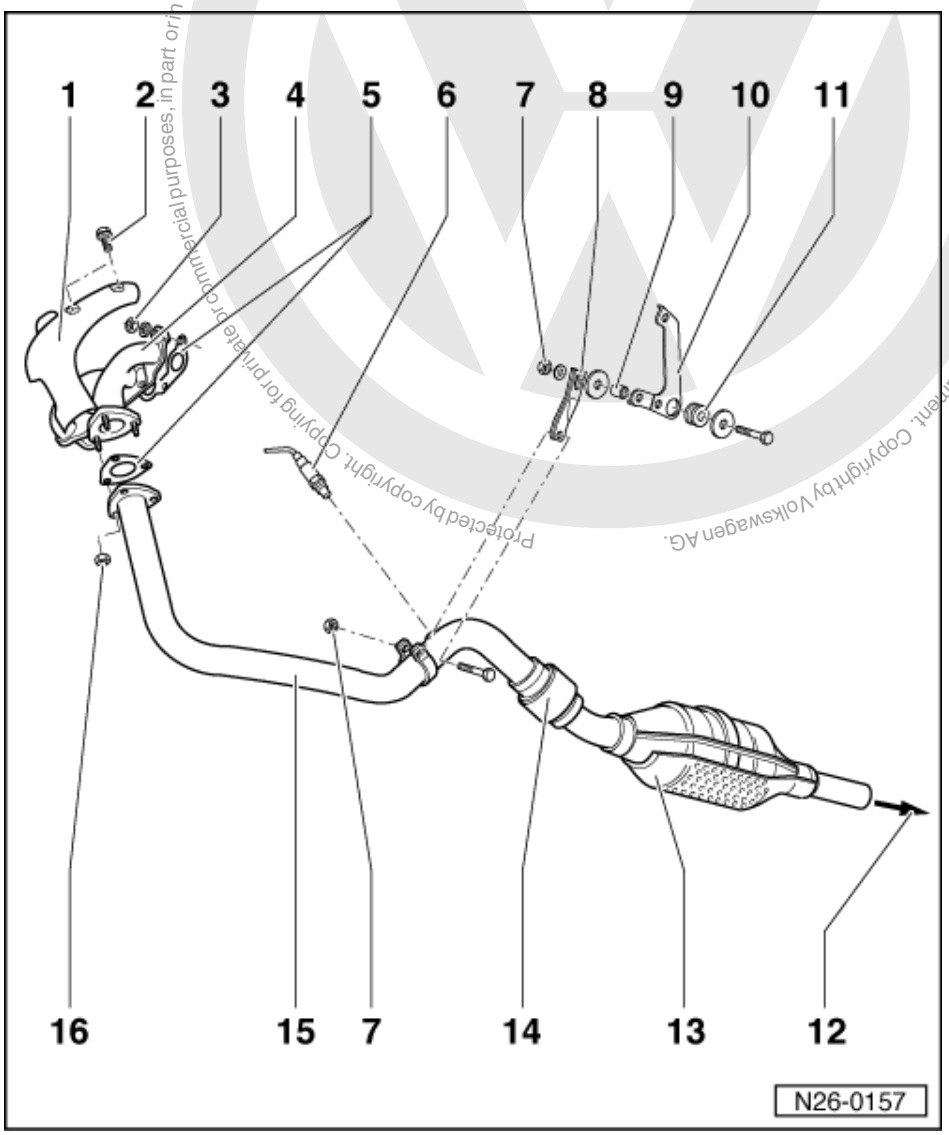

Notes:

- After working on the exhaust system ensure that the system is not under stress, and that it has sufficient clearance from the bodywork. If necessary, loosen double and single clamps and align silencer and exhaust pipe so that sufficient clearance is maintained to the bodywork and the support rings are evenly loaded.
- Renew self-locking nuts.

Exhaust manifold, front exhaust pipe and catalyst with attachments

1 Warm air collector plate
2 10 Nm

satelettronica

Reproduced by Volkswagen AG. Volkswagen AG does not guarantee or accept any liability with respect to the correctness of information in this document. Copyright by Volkswagen AG. Reproduced for non-commercial purposes, in part or in whole, is not permitted unless authorised by Volkswagen AG.

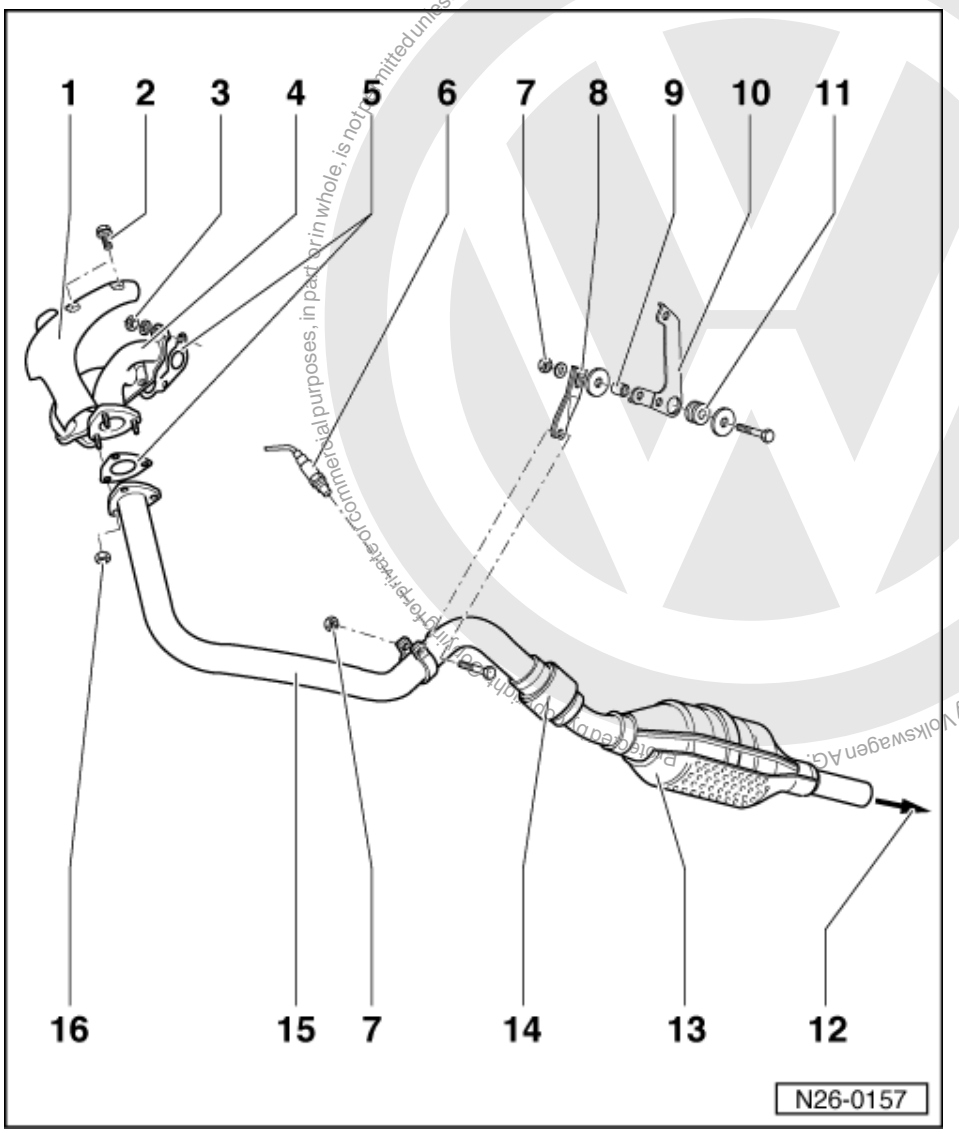

3 Lock nut, 25 Nm
- Grease thread with "G5"

4 Exhaust manifold
- AEX, AKV: Single pipe
- AEE, ALM: Twin pipe

5 Gasket
- Renew

6 Lambda probe, 55 Nm
- Grease only the threads with "G5"; "G5" must not get into the slots on the probe body
- Remove and install with 3337
- Checking:

=> Repair group 24; Mixture preparation, injection Mixture preparation, injection

7 20 Nm*)
8 Bracket*)
9 Spacer bush*)
10 Bracket*)

satelettronica

*)Only engine code AEX,

AKV, APQ, ANX

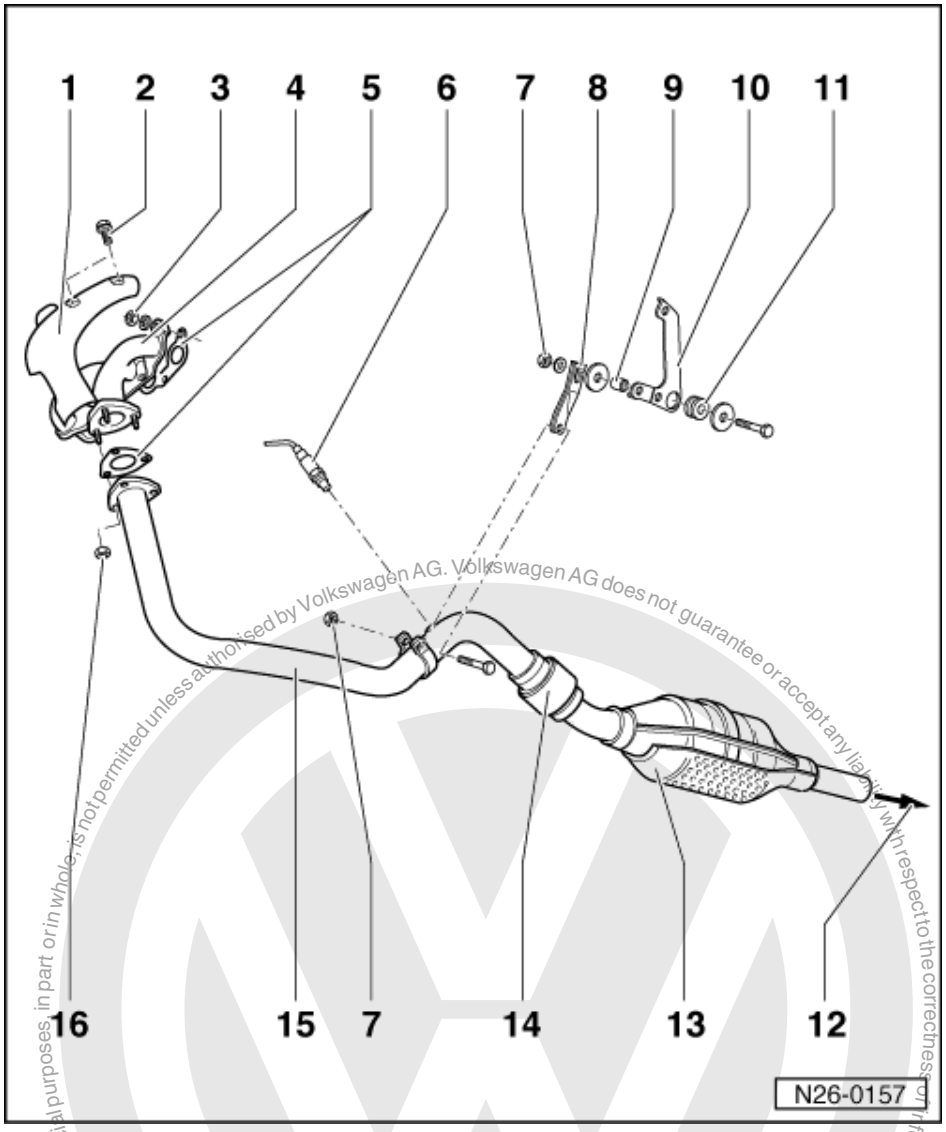

11 Rubber bush*)
12 To silencer
13 Catalyst
14 Joint
- AEE: Two joints near exhaust manifold

15 Front exhaust pipe with catalyst
- AEX, AKV, APQ, ANX: Single pipe
- AEE, ALM: Twin pipe

16 40 Nm
- Grease thread with "G5"

*)Only engine code AEX,

AKV, APQ, ANX

Protected by copyright. Copyright by Volkswagen AG. Volkswagen AG does not guarantee or accept any liability with respect to the correctness of information in this document. Copyright by Volkswagen AG. Reproduction, in whole or in part, for commercial purposes, is not permitted unless authorised by Volkswagen AG.
satelettronica

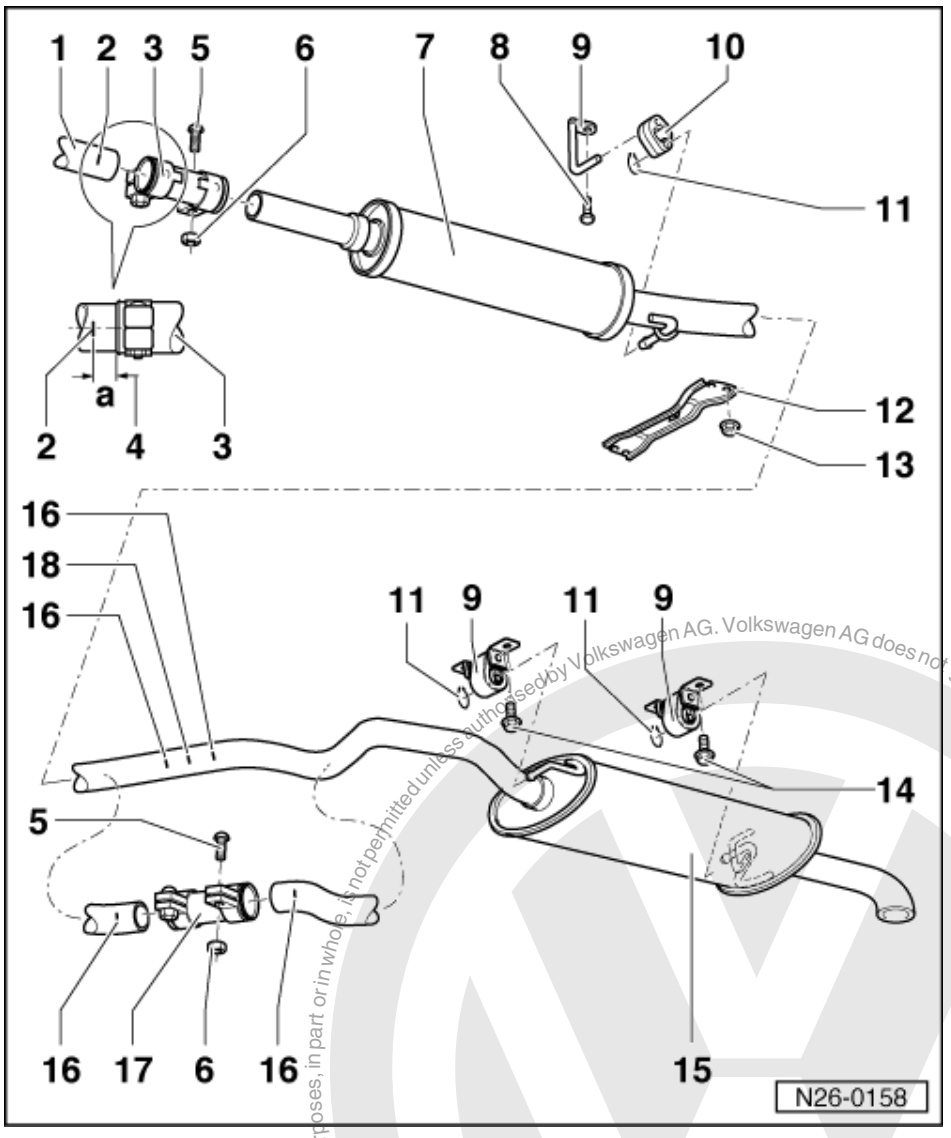

Silencer with mountings Polo Classic, Polo Estate

Version for Caddy => Page 113

1 Front exhaust pipe with catalyst
2 Marking
- Three times on circumference

3 Double clamp
4 Dimension-a- = ca. 5 mm
5 Carriage bolt
6 40 Nm
7 Front silencer1)
8 25 Nm
9 Mounting

Protected by copyright. Copying for private or commercial purposes, in part or in whole, is not permitted unless authorised by Volkswagen AG. Volkswagen AG does not guarantee or accept any liability with respect to the correctness of information in this document. Copyright by Volkswagen AG.
satelettronica

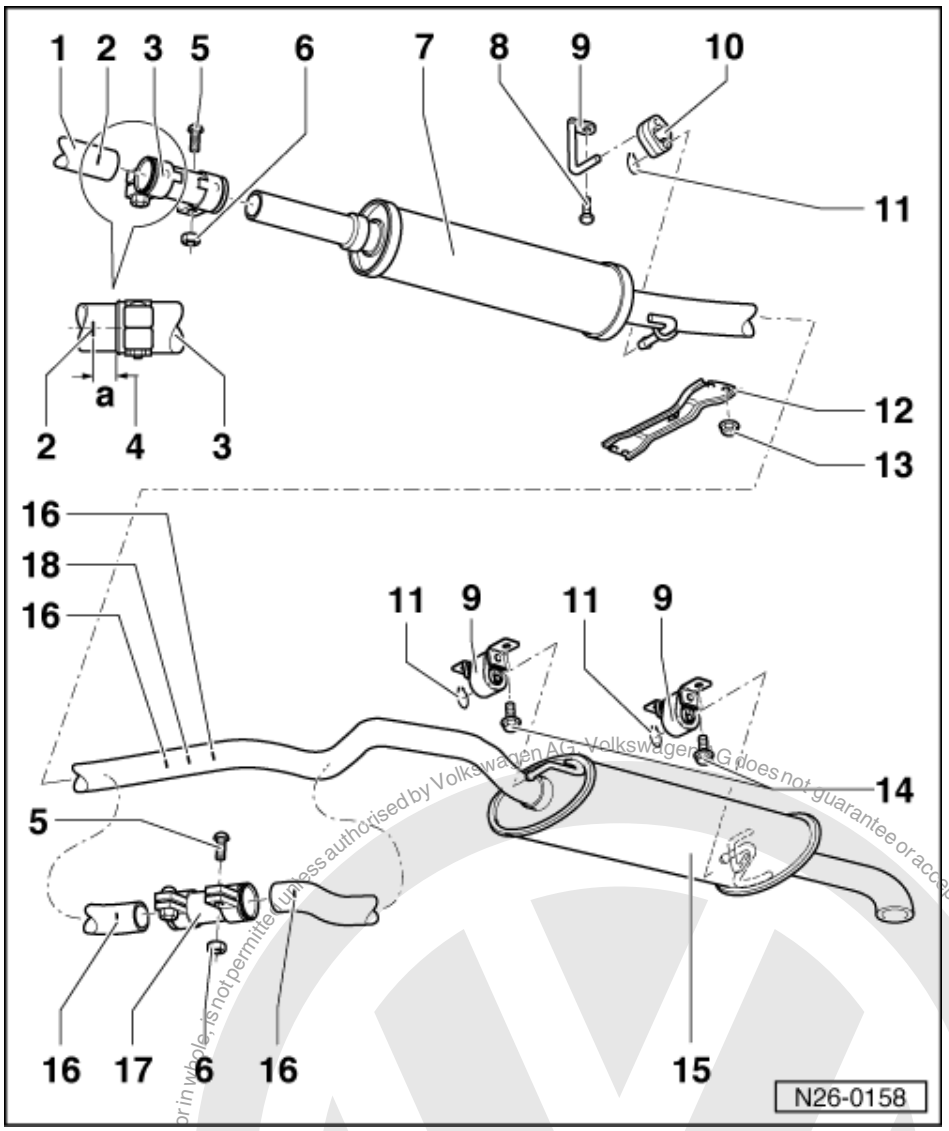

10 Mounting
- Renew if damaged

11 Circlip

12 Connecting piece

13 15 Nm

14 20 Nm + 1/4 turn (90 °) further

15 Rear silencer1)

16 Marking
- Three times on circumference
- Double clamp - 17 - for repairs

17 Repair double clamp
- Must be slid onto the markings - 16 -

Protected by copyright. Copying for private or commercial purposes, in part or in whole, is not permitted unless authorised by Volkswagen AG. Volkswagen AG does not guarantee or accept any liability with respect to the correctness of information in this document. Copyright by Volkswagen AG.
satelettronica

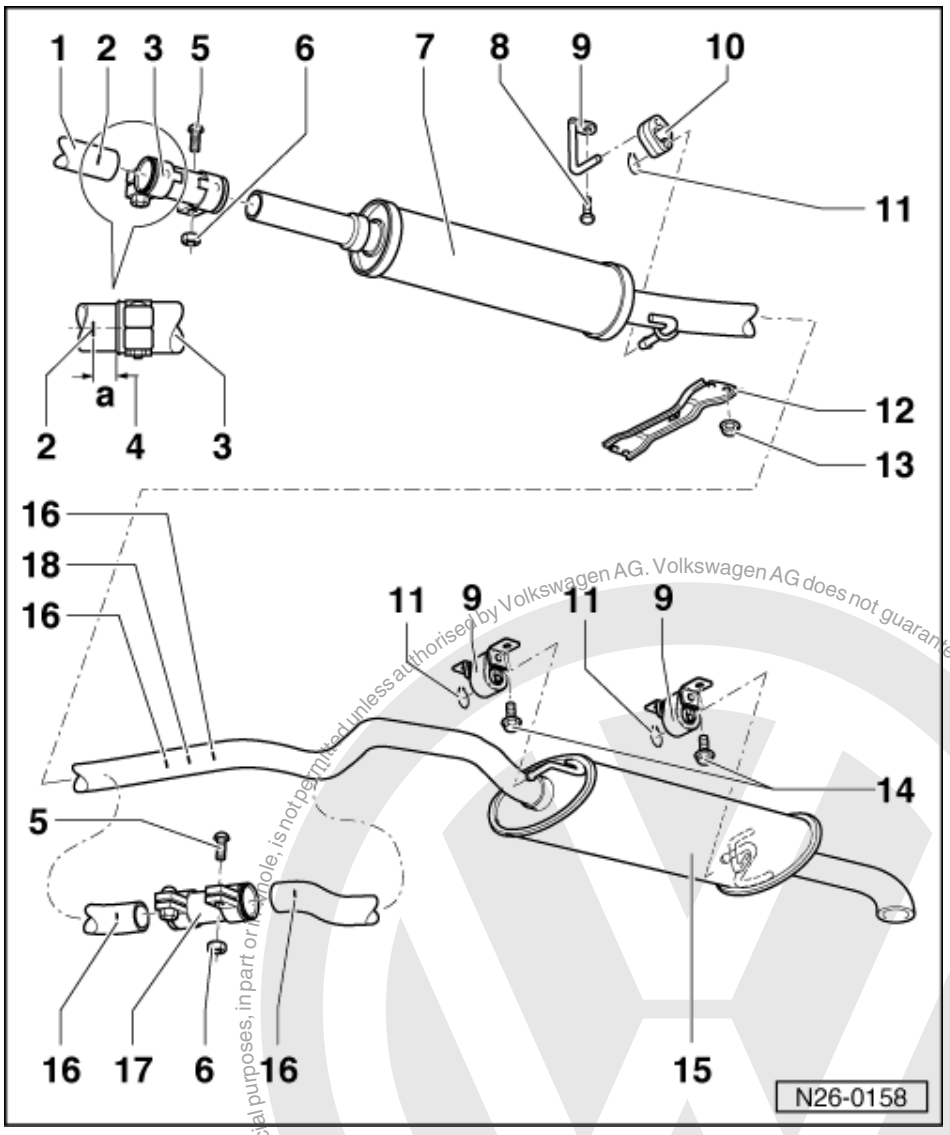

18 Separating point

- For repair cases1)
- Marked by three impressions on circumference of connecting pipe

1) Front and rear silencers are installed as a single component as standard. In repair cases the front and rear silencers are supplied individually and a repair double clamp item 17 is supplied as a joint. Cut through connecting pipe at separating point - 18 - with a body saw e.g. V.A.G 1523.

Protected by copyright. Copyright by Volkswagen AG. Volkswagen AG does not guarantee or accept any liability with respect to the correctness of information in this document. Copyright by Volkswagen AG. Reproduction, in part or in whole, is not permitted unless authorised by Volkswagen AG. Volkswagen AG does not guarantee or accept any liability with respect to the correctness of information in this document. Copyright by Volkswagen AG.
satelettronica

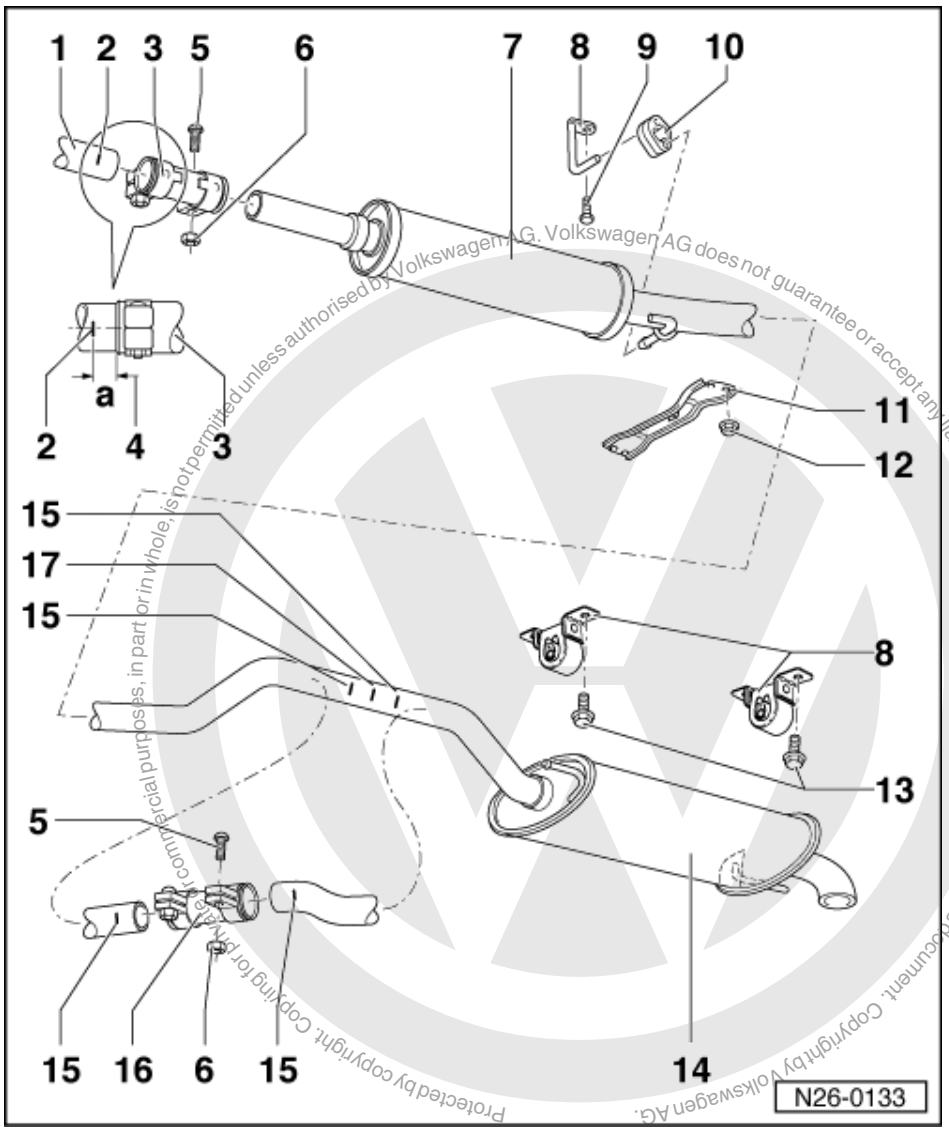

Protected by copyright. Copying for private or commercial purposes, in part or in whole, is not permitted unless authorised by Volkswagen AG. Volkswagen AG does not guarantee or accept any liability with respect to the correctness of information in this document. Copyright by Volkswagen AG.

Silencer with mountings Caddy

1 Front exhaust pipe with catalyst
2 Marking
- Three times on circumference

3 Double clamp
4 Dimension-a- = ca. 5 mm
5 Carriage bolt
6 40 Nm
7 Front silencer1)
8 Mounting
9 25 Nm
10 Mounting
- Renew if damaged

satelettronica

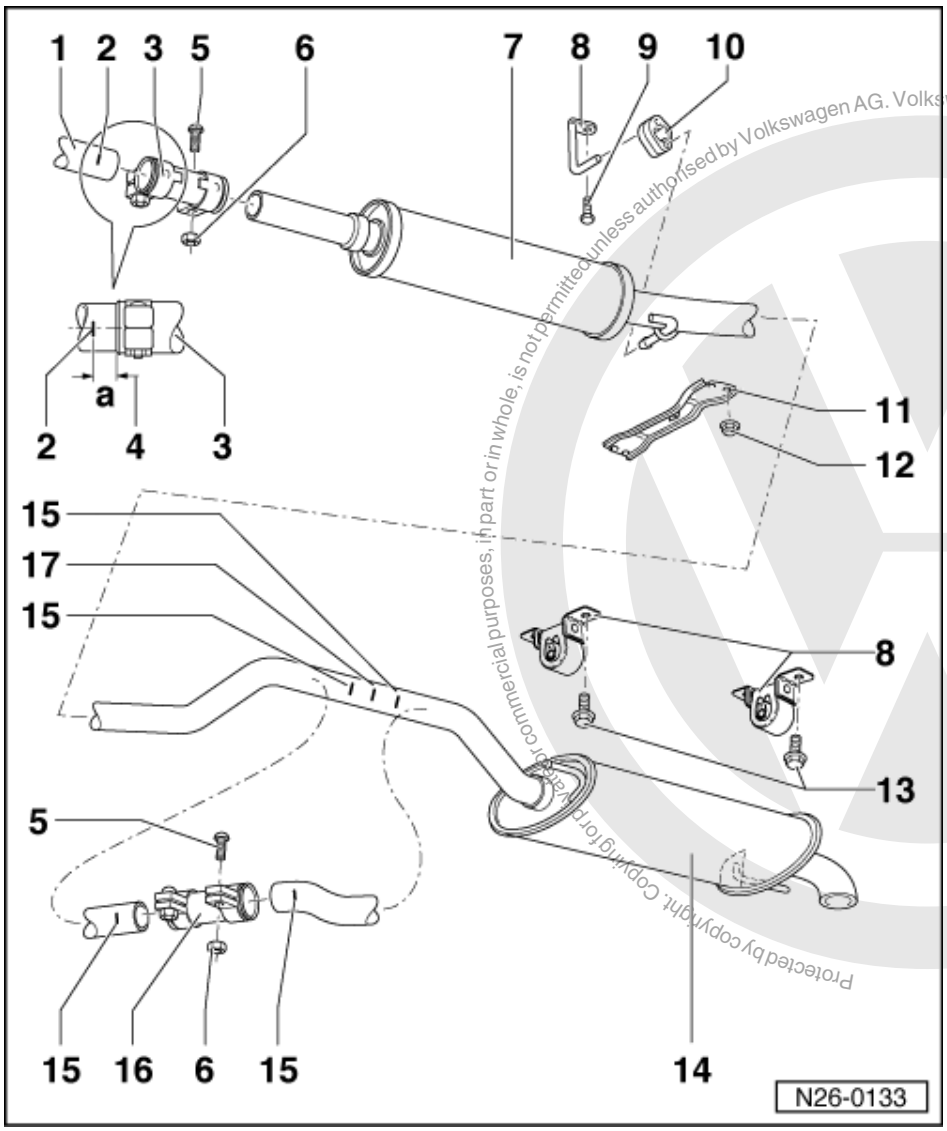

11 Connecting piece
12 15 Nm
13 20 Nm + 1/4 turn (90 °) further
14 Rear silencer1)
15 Marking
- Three times on circumference
- Double clamp - 16 - for repairs

16 Repair double clamp
- Must be slid onto the markings - 15 -

17 Separating point
- For repair cases1)
- Marked by three impressions on circumference of connecting pipe

Protected by copyright. Copying for private or commercial purposes, in part or in whole, is not permitted unless authorised by Volkswagen AG. Volkswagen AG does not guarantee or accept any liability with respect to the correctness of information in this document. Copyright by Volkswagen AG.
satelettronica

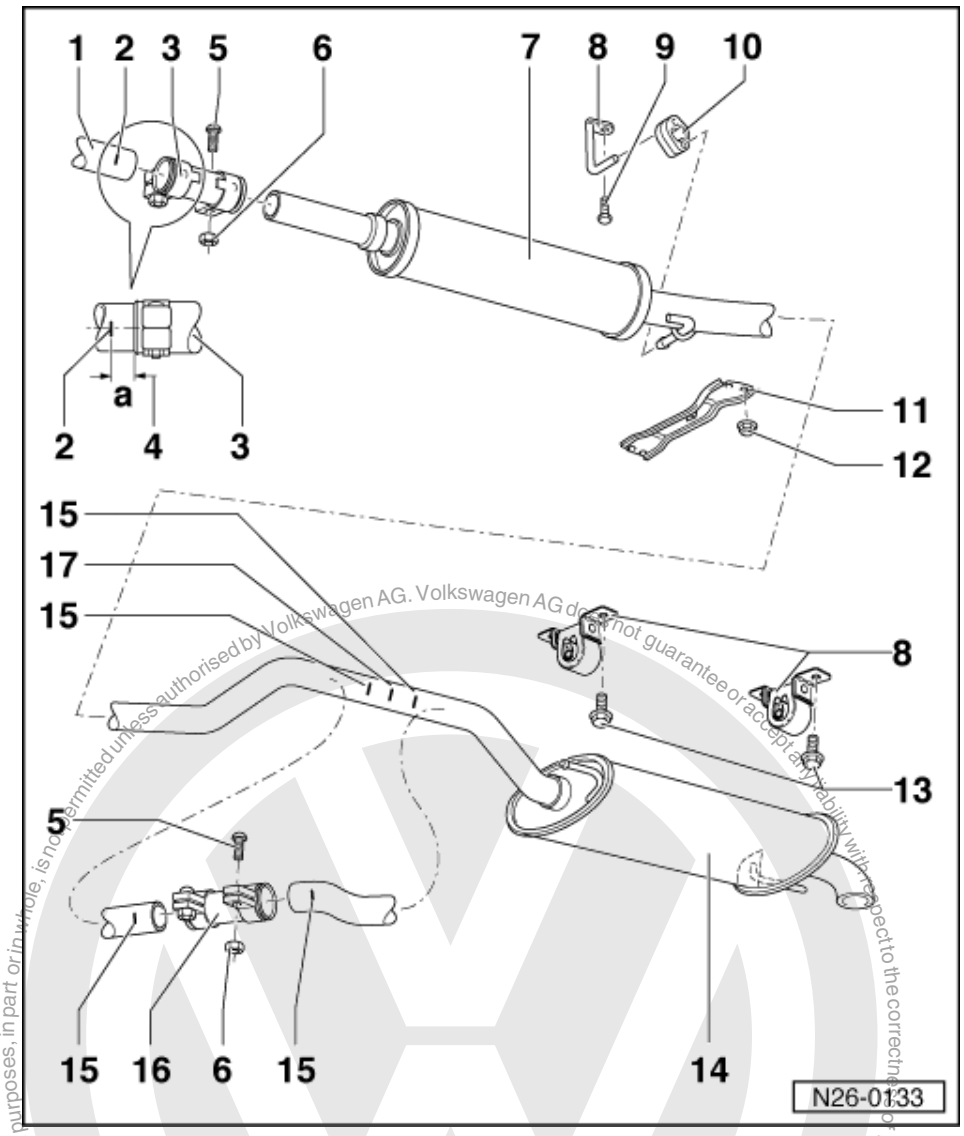

1) Front and rear silencers are installed as a single component as standard. In repair cases the front and rear silencers are supplied individually and a repair double clamp item 16 is supplied as a joint. Cut through connecting pipe at separating point - 17 - with a body saw e.g. V.A.G 1523.

Protected by copyright. Copying for private or commercial purposes, in part or in whole, is not permitted unless authorised by Volkswagen AG. Volkswagen AG does not guarantee or accept any liability with respect to the correctness of information in this document. Copyright by Volkswagen AG.
satelettronica